INSTALLER: LEAVE THIS MANUAL WITH THE APPLIANCE.
CONSUMER: RETAIN THIS MANUAL FOR FUTURE REFERENCE.

NAPOLEON®
QUALITY FIREPLACES

INSTALLATION AND OPERATING INSTRUCTIONS

CERTIFIED UNDER CANADIAN AND AMERICAN NATIONAL STANDARDS: CSA 2.22, ANSI Z21.50 FOR VENTED GAS FIREPLACES.

CERTIFIED FOR CANADA AND UNITED STATES USING ANSI/CSA METHODS.

BGD90NT
NATURAL GAS

BGD90PT
PROPANE

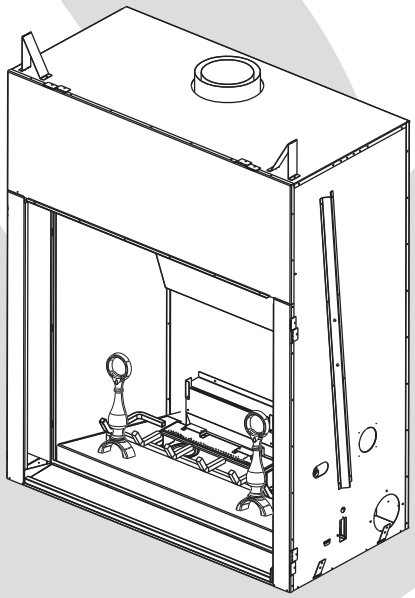

SAFETY INFORMATION

⚠ WARNING

If the information in these instructions are not followed exactly, a fire or explosion may result causing property damage, personal injury or loss of life.

- Do not store or use gasoline or other flammable vapors and liquids in the vicinity of this or any other appliance.
- WHAT TO DO IF YOU SMELL GAS:

- **Do not try to light any appliance.**
- **Do not touch any electrical switch; do not use any phone in your building.**
- **Immediately call your gas supplier from a neighbour's phone. Follow the gas supplier's instructions.**
- **If you cannot reach your gas supplier, call the fire department.**

- Installation and service must be performed by a qualified installer, service agency or the supplier.

This appliance may be installed as an OEM installation in manufactured home (USA only) or mobile home and must be installed in accordance with the manufacturer's instructions and the Manufactured Home Construction and Safety Standard, Title 24 CFR, Part 3280, in the United States or the Standard for Installation in Mobile Homes, CAN/CSA Z240 MH, in Canada.

This appliance is only for use with the type(s) of gas indicated on the rating plate. A conversion kit is supplied with the appliance.

⚠ WARNING

HOT GLASS WILL CAUSE BURNS.

DO NOT TOUCH GLASS UNTIL COOLED.

NEVER ALLOW CHILDREN TO TOUCH GLASS.

APPLY SERIAL NUMBER LABEL FROM CARTON

Serial No. XXXXXX000000
MODEL NO.

HPBA Hearth, Patio & Barbecue Association
GO GREEN ECO FRIENDLY TECHNOLOGY
Quality System Certified To ISO 9001-2008
C ETL LISTED US Intertek

Wolf Steel Ltd., 24 Napoleon Rd., Barrie, ON, L4M 0G8 Canada /
103 Miller Drive, Crittenden, Kentucky, USA, 41030
Phone (705)721-1212 • Fax (705)722-6031 • www.napoleonfireplaces.com • ask@napoleonproducts.com

Obadiah's · 406-300-1776

TABLE OF CONTENTS

1.0	INSTALLATION OVERVIEW	3
2.0	**INTRODUCTION**	**4**
2.1	DIMENSIONS	5
2.2	GENERAL INSTRUCTIONS	5
2.3	GENERAL INFORMATION	6
2.4	RATING PLATE INFORMATION	7
3.0	**VENTING**	**8**
3.1	VENTING LENGTHS AND COMPONENTS	8
3.2	TYPICAL VENT INSTALLATION	9
3.3	VENT TERMINAL CLEARANCES	10
3.4	VENTING APPLICATION FLOW CHART	11
3.5	DEFINITIONS	11
3.6	ELBOW VENT LENGTH VALUES	11
3.7	TOP EXIT HORIZONTAL TERMINATION	12
3.8	TOP EXIT VERTICAL TERMINATION	14
4.0	**INSTALLATION**	**16**
4.1	WALL AND CEILING PROTECTION	16
4.1.1	HORIZONTAL INSTALLATION	17
4.1.2	VERTICAL INSTALLATION	17
4.2	USING FLEXIBLE VENT COMPONENTS	18
4.2.1	HORIZONTAL AIR TERMINAL INSTALLATION	18
4.2.2	VERTICAL AIR TERMINAL INSTALLATION	19
4.2.3	APPLIANCE VENT CONNECTION	20
4.3	MOBILE HOME INSTALLATION	20
4.4	GAS INSTALLATION	21
5.0	**FRAMING**	**22**
5.1	MINIMUM CLEARANCE TO COMBUSTIBLES	24
5.2	MINIMUM ENCLOSURE CLEARANCES	26
5.3	MINIMUM MANTEL CLEARANCES	27
6.0	**ELECTRICAL CONNECTION**	**28**
6.1	RECEPTACLE WIRING DIAGRAM	29
6.2	OPTIONAL BLOWER INSTALLATION	29
7.0	**FINISHING**	**30**
7.1	DOOR REMOVAL	30
7.2	LOG SHIPPING BRACKET	32
7.3	BRICK PANEL INSTALLATION	32
7.4	ANDIRON PLACEMENT	33
7.5	LOG PLACEMENT	34
7.6	CHARCOAL EMBERS	35
7.7	VERMICULITE	35
7.8	GLOWING EMBERS	35
8.0	**REMOTE AND VALVE ACCESS**	**36**
8.1	INNER ACCESS PANEL	36
8.2	BULKHEAD ACCESS PLATE	36
8.3	REMOTE RECEIVER REMOVAL	36
8.4	CONTROL MODULE REMOVAL	37
8.5	VALVE REMOVAL	37
8.6	“AUTO SPARK” BATTERY REMOVAL	37
9.0	**OPERATION**	**38**
9.1	GENERAL TRANSMITTER LAYOUT	38
9.2	APPLIANCE OPERATION	38
9.3	HAND HELD REMOTE OPERATIONS	38
9.4	TEMPERATURE DISPLAY	39
9.5	ROOM THERMOSTAT	39
9.6	SMART THERMOSTAT	39
9.7	FLAME HEIGHT	39
9.8	FAN SPEED	40
9.9	CHILD PROOF FUNCTION	40
9.10	NIGHT LIGHTS™	40
9.11	LOW BATTERY / MANUAL BYPASS	40
9.12	IN THE EVENT OF A POWER FAILURE	41
9.13	CONTROL MODULE	41
9.14	TIMED BLOWER	41
10.0	**OPERATING INSTRUCTIONS**	**42**
11.0	**ADJUSTMENTS**	**43**
11.1	PILOT BURNER ADJUSTMENT	43
11.2	VENTURI ADJUSTMENT	43
11.3	FLAME CHARACTERISTICS	44
11.4	RESTRICTING VERTICAL VENTS	44
12.0	**MAINTENANCE**	**45**
12.1	CARE OF GLASS	45
12.2	GLASS / DOOR REPLACEMENT	46
12.3	NIGHT LIGHT™ REPLACEMENT	46
13.0	**REPLACEMENTS**	**47**
14.0	**TROUBLE SHOOTING**	**51**
15.0	**WARRANTY**	**54**
16.0	**SERVICE HISTORY**	**55**

NOTE: Changes, other than editorial, are denoted by a vertical line in the margin.

1.0 INSTALLATION OVERVIEW

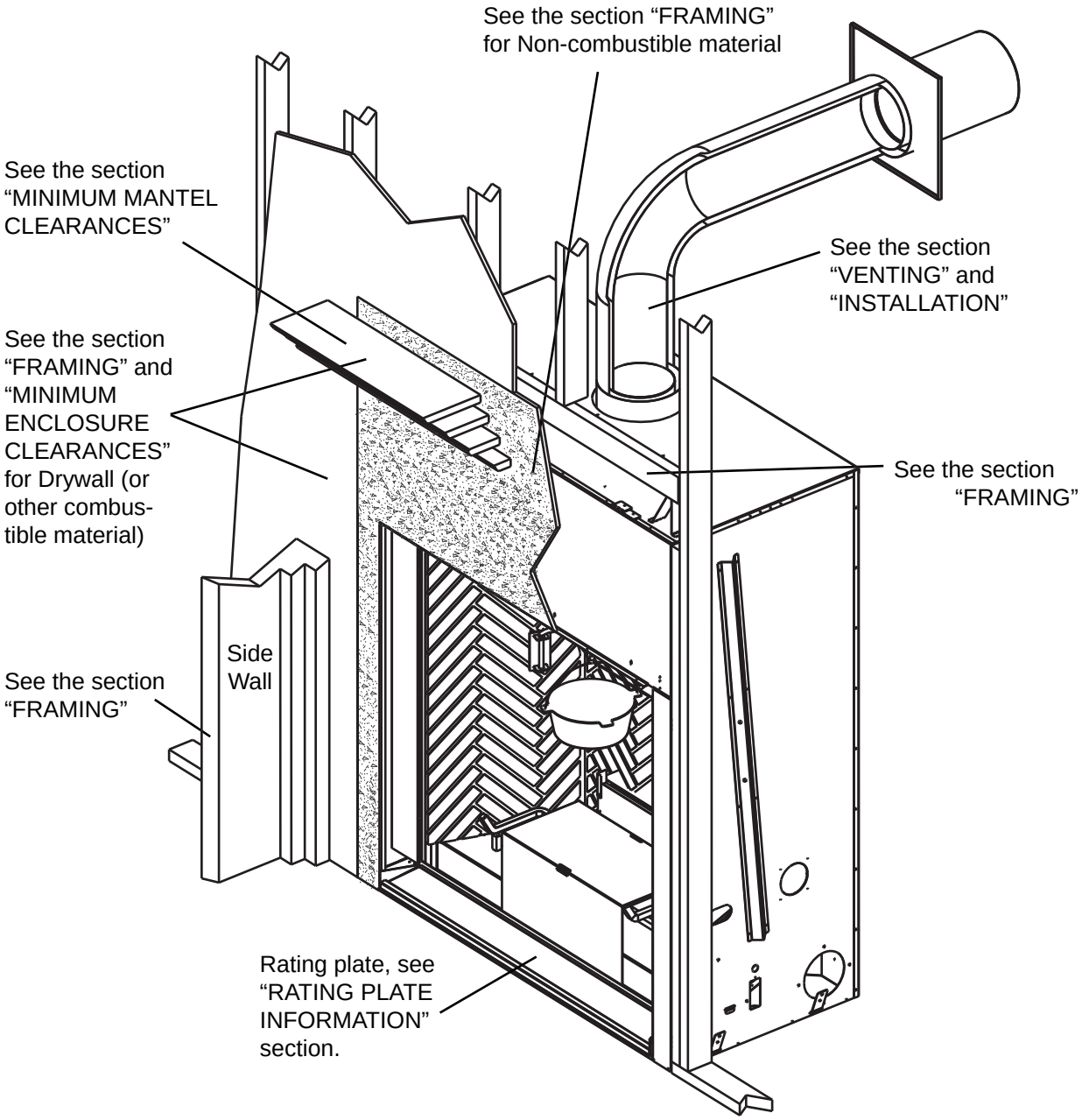

2.0 INTRODUCTION

⚠ WARNING

- **THIS APPLIANCE IS HOT WHEN OPERATED AND CAN CAUSE SEVERE BURNS IF CONTACTED.**
- **ANY CHANGES TO THIS APPLIANCE OR IT'S CONTROLS CAN BE DANGEROUS AND IS PROHIBITED.**
- Do not operate appliance before reading and understanding operating instructions. Failure to operate appliance according to operating instructions could cause fire or injury.
- Risk of fire or asphyxiation do not operate appliance with fixed glass removed.
- Do not connect 110 volts to the control valve.
- Risk of burns. The appliance should be turned off and cooled before servicing.
- Do not install damaged, incomplete or substitute components.
- Risk of cuts and abrasions. Wear protective gloves and safety glasses during installation. Sheet metal edges may be sharp.
- Do not burn wood or other materials in this appliance.
- Children and adults should be alerted to the hazards of high surface temperature and should stay away to avoid burns or clothing ignition.
- Young children should be carefully supervised when they are in the same room as the appliance. Toddlers, young children and others may be susceptible to accidental contact burns. A physical barrier is recommended if there are at risk individuals in the house. To restrict access to an appliance or stove, install an adjustable safety gate to keep toddlers, young children and other at risk individuals out of the room and away from hot surfaces.
- Clothing or other flammable material should not be placed on or near the appliance.
- Due to high temperatures, the appliance should be located out of traffic and away from furniture and draperies.
- Ensure you have incorporated adequate safety measure to protect infants/toddlers from touching hot surfaces.
- Even after the appliance is out, the glass and/or screen will remain hot for an extended period of time.
- Check with your local hearth specialty dealer for safety screens and hearth guards to protect children from hot surfaces. These screens and guards must be fastened to the floor.
- Any safety screen or guard removed for servicing must be replaced prior to operating the appliance.
- The appliance is a vented gas-fired appliance. Do not burn wood or other materials in the appliance.
- It is imperative that the control compartments, burners and circulating blower and its passageway in the appliance and venting system are kept clean. The appliance and its venting system should be inspected before use and at least annually by a qualified service person. More frequent cleaning may be required due to excessive lint from carpeting, bedding material, etc. The appliance area must be kept clear and free from combustible materials, gasoline and other flammable vapors and liquids.
- Under no circumstances should this appliance be modified.
- This appliance must not be connected to a chimney flue pipe serving a separate solid fuel burning appliance.
- Do not use this appliance if any part has been under water. Immediately call a qualified service technician to inspect the appliance and to replace any part of the control system and any gas control which has been under water.
- Do not operate the appliance with the glass door removed, cracked or broken. Replacement of the glass should be done by a licensed or qualified service person.
- Do not strike or slam shut the appliance glass door.
- When equipped with pressure relief doors, they must be kept closed while the appliance is operating to prevent exhaust fumes containing carbon monoxide, from entering into the home. Temperatures of the exhaust escaping through these openings can also cause the surrounding combustible materials to overheat and catch fire.Only doors / optional fronts certified with the unit are to be installed on the appliance.
- Only doors / optional fronts certified with the unit are to be installed on the appliance.
- Keep the packaging material out of reach of children and dispose of the material in a safe manner. As with all plastic bags, these are not toys and should be kept away from children and infants.
- As with any combustion appliance, we recommend having your appliance regularly inspected and serviced as well as having a Carbon Monoxide Detector installed in the same area to defend you and your family against Carbon Monoxide.
- Ensure clearances to combustibles are maintained when building a mantel or shelves above the appliance. Elevated temperatures on the wall or in the air above the appliance can cause melting, discolouration or damage to decorations, a T.V. or other electronic components.
- This appliance uses and requires a fast acting thermocouple. Replace only with a fast acting thermocouple supplied by Wolf Steel Ltd.

3.1C

2.1 DIMENSIONS

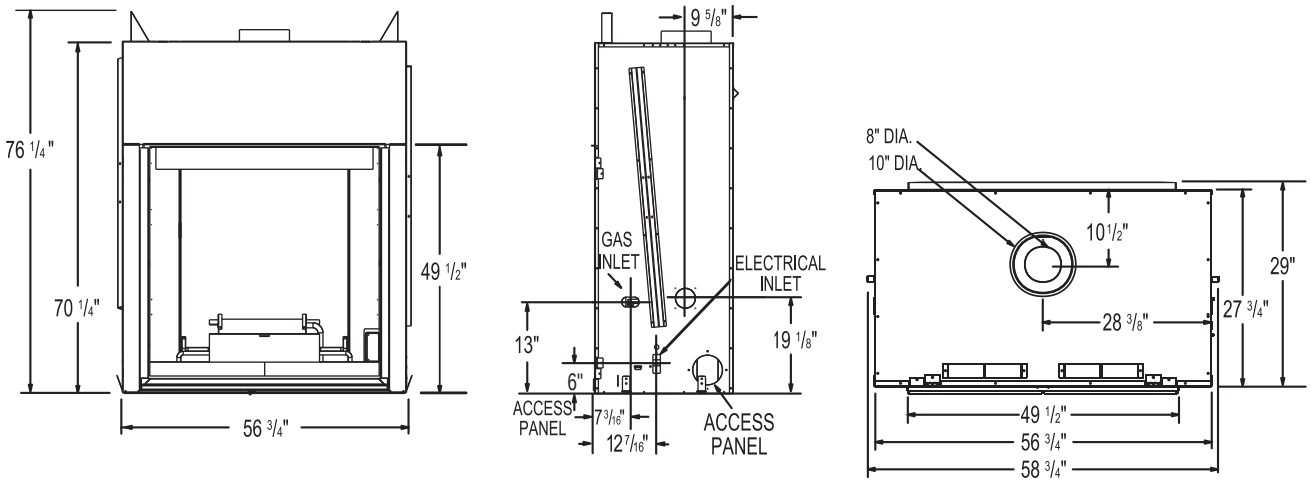

2.2 GENERAL INSTRUCTIONS

⚠ WARNING
ALWAYS LIGHT THE PILOT WHETHER FOR THE FIRST TIME OR IF THE GAS SUPPLY HAS RUN OUT, WITH THE GLASS DOOR OPENED OR REMOVED.
PROVIDE ADEQUATE CLEARANCE FOR SERVICING AND OPERATING THE APPLIANCE.
PROVIDE ADEQUATE VENTILATION.
NEVER OBSTRUCT THE FRONT OPENING OF THE APPLIANCE.
OBJECTS PLACED IN FRONT OF THE APPLIANCE MUST BE KEPT A MINIMUM OF 48" FROM THE FRONT FACE OF THE UNIT.
SURFACES AROUND AND ESPECIALLY ABOVE THE APPLIANCE CAN BECOME HOT. AVOID CONTACT WHEN THE APPLIANCE IS OPERATING.
FIRE RISK. EXPLOSION HAZARD.
HIGH PRESSURE WILL DAMAGE VALVE. DISCONNECT GAS SUPPLY PIPING BEFORE PRESSURE TESTING GAS LINE AT TEST PRESSURES ABOVE 1/2 PSIG. CLOSE THE MANUAL SHUT-OFF VALVE BEFORE PRESSURE TESTING GAS LINE AT TEST PRESSURES EQUAL TO OR LESS THAN 1/2 PSIG.
USE ONLY WOLF STEEL APPROVED OPTIONAL ACCESSORIES AND REPLACEMENT PARTS WITH THIS APPLIANCE. USING NON-LISTED ACCESSORIES (BLOWERS, DOORS, LOUVRES, TRIMS, GAS COMPONENTS, VENTING COMPONENTS, ETC.) COULD RESULT IN A SAFETY HAZARD AND WILL VOID THE WARRANTY AND CERTIFICATION.

THIS GAS APPLIANCE SHOULD BE INSTALLED AND SERVICED BY A QUALIFIED INSTALLER to conform with local codes. Installation practices vary from region to region and it is important to know the specifics that apply to your area, for example in Massachusetts State:

- This product must be installed by a licensed plumber or gas fitter when installed within the commonwealth of Massachusetts.
- The appliance damper must be removed or welded in the open position prior to installation of a appliance insert or gas log.
- The appliance off valve must be a "T" handle gas cock.
- The flexible connector must not be longer than 36 inches.
- A Carbon Monoxide detector is required in all rooms containing gas fired appliances.
- The appliance is not approved for installation in a bedroom or bathroom unless the unit is a direct vent sealed combustion product.

The installation must conform with local codes or, in absence of local codes, the National Gas and Propane Installation Code CSA B149.1 in Canada, or the National Fuel Gas Code, ANSI Z223.1 / NFPA 54 in the United States. Suitable for mobile home installation if installed in accordance with the current standard CAN/CSA Z240MH Series, for gas equipped mobile homes, in Canada or ANSI Z223.1 and NFPA 54 in the United States.

NATIONAL FIREPLACE INSTITUTE NFI CERTIFIED www.nficertified.org

We suggest that our gas hearth products be installed and serviced by professionals who are certified in the U.S. by the National Fireplace Institute® (NFI) as NFI Gas Specialists

As long as the required clearance to combustibles is maintained, the most desirable and beneficial location for an appliance is in the center of a building, thereby allowing the most efficient use of the heat created. The location of windows, doors and the traffic flow in the room where the appliance is to be located should be considered. If possible, you should choose a location where the vent will pass through the house without cutting a floor or roof joist.

If the appliance is installed directly on carpeting, vinyl tile or other combustible material other than wood flooring, the appliance shall be installed on a metal or wood panel extending the full width and depth.

Some appliances have optional fans or blowers. If an optional fan or blower is installed, the junction box must be electrically connected and grounded in accordance with local codes, use the current CSA C22.1 Canadian Electrical Code in Canada or the ANSI/NFPA 70 National Electrical code in the United States.

4.1A

NOTE: Non-combustible finishing material (i.e. Cement board, brick, stone, tile) must be used to finish the front of the appliance.

2.3 GENERAL INFORMATION

FOR YOUR SATISFACTION, THIS APPLIANCE HAS BEEN TEST-FIRED TO ASSURE ITS OPERATION AND QUALITY!

	NG	LP
Altitude (FT)	0-4,500	0-4,500
Max. Input (BTU/HR)	50,000	50,000
Max. Output Steady State (BTU/HR)	33,540	34,000
Efficiency (w/the fan on)	63%	61%
Min. Inlet Gas Supply Pressure	4.5" Water Column	11" Water Column
Max. Inlet Gas Supply Pressure	7" Water Column	13" Water Column
Manifold Pressure (Under Flow Conditions)	3.5" Water Column	10" Water Column

This appliance is approved for bathroom, bedroom and bed-sitting room installations and is certified for mobile home installation. The natural gas model can only be installed in a mobile home that is permanently positioned on its site and fueled with natural gas.

This appliance is only for use with the type of gas indicated on the rating plate. This appliance is not convertible for use with other gases, unless kit is used. Not external electricity (110 volts or 24 volts) is required for the gas system operation.

Expansion / contraction noised during heating up and cooling down cycles are normal and are to be expected. Change in flame appearance from “HI” to “LO” is more evident in natural gas than in propane.

2.4 RATING PLATE INFORMATION

<u>INSTALLER:</u> It is your responsibility to check off the appropriate box on the rating plate according to the model, venting and gas type of the appliance.

For rating plate location, see “INSTALLATION OVERVIEW” section.

This illustration is for reference only. Refer to the rating plate on the appliance for accurate information.

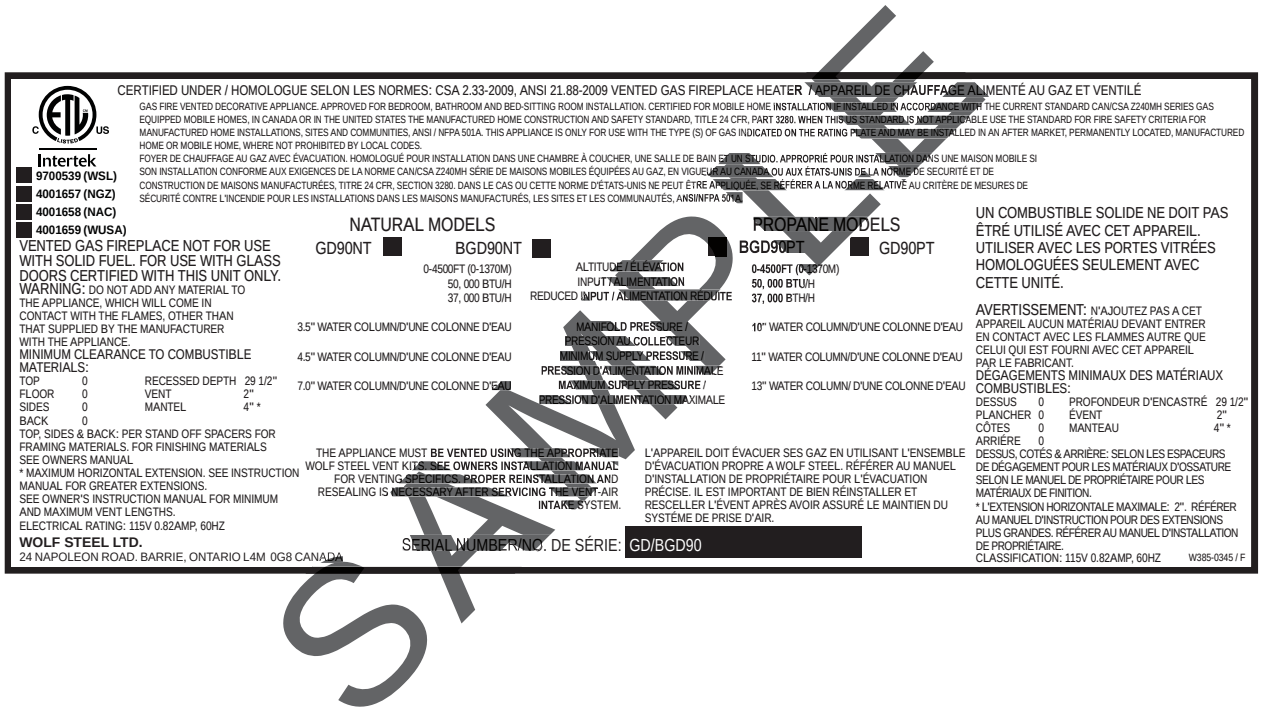

SAMPLE

3.0 VENTING

⚠ WARNING

RISK OF FIRE, MAINTAIN SPECIFIED AIR SPACE CLEARANCES TO VENT PIPE AND APPLIANCE.

IF VENTING IS INCLUDED WITH SPACERS THE VENT SYSTEM MUST BE SUPPORTED EVERY 3 FEET FOR BOTH VERTICAL AND HORIZONTAL RUNS. USE SUPPORTS OR EQUIVALENT NON-COMBUSTIBLE STRAPPING TO MAINTAIN THE REQUIRED CLEARANCE FROM COMBUSTIBLES. USE WOLF STEEL LTD. SUPPORT RING ASSEMBLY W010-0370 OR EQUIVALENT NON-COMBUSTIBLE STRAPPING TO MAINTAIN THE MINIMUM CLEARANCE TO COMBUSTIBLES FOR BOTH VERTICAL AND HORIZONTAL RUNS. SPACERS ARE ATTACHED TO THE INNER PIPE AT PREDETERMINED INTERVALS TO MAINTAIN AN EVEN AIR GAP TO THE OUTER PIPE. THIS GAP IS REQUIRED FOR SAFE OPERATION. A SPACER IS REQUIRED AT THE START, MIDDLE AND END OF EACH ELBOW TO ENSURE THIS GAP IS MAINTAINED. THESE SPACERS MUST NOT BE REMOVED.

This fireplaces uses 8” exhaust / 10” air intake vent pipe system.
Refer to the section applicable to your installation.

For safe and proper operation of the fireplace follow the venting instruction exactly. Deviation from the minimum vertical vent length can create difficulty in burner start-up and/or carboning. Under extreme vent configurations, allow several minutes (5-15) for the flame to stabilize after ignition. Provide a means for visually checking the vent connection to the fireplace after the fireplace is installed. Use a firestop, vent pipe shield or attic insulation shield when penetrating interior walls, floor or ceiling.

NOTE: If for any reason the vent air intake system is disassembled; reinstall per the instructions provided for the initial installation.

7.3A

3.1 VENTING LENGTHS AND COMPONENTS

For vent systems that provide seals on the inner exhaust flue, only the outer air intake joints must be sealed using a red high temperature silicone (RTV). This same sealant may be used on both the inner exhaust and outer intake vent pipe joints of all other approved vent systems except for the exhaust vent pipe connection to the fireplace flue collar which must be sealed using the black high temperature sealant Mill Pac.

When using Wolf Steel venting components, use only approved Wolf Steel flexible components with the following termination kits: wall terminal kit **GD622R**, or 1/12 to 7/12 pitch roof terminal kit **GD610**, 8/12 to 12/12 roof terminal kit **GD611** or flat roof terminal kit **GD612**. With flexible venting, in conjunction with the various terminations, use either the 5 foot vent kit **GD620** or the 10 foot vent kit **GD630**.

For optimum flame appearance and fireplace performance, keep the vent length and number of elbows to a minimum.
The air terminal must remain unobstructed at all times. Examine the air terminal at least once a year to verify that it is unobstructed and undamaged.

The minimum allowable vertical vent length is 3 feet maximum allowable vertical vent length is 40 feet. The maximum number of allowable 8” vent connections is three horizontally or vertically (excluding the fireplace and the air terminal connections).

When venting, the horizontal run must be kept to a minimum of 36“ or a maximum of 20 feet. If a 20 foot horizontal run is required, the fireplace must have a minimum vertical rise immediately off the fireplace of 57”. When terminating vertically, the vertical rise is a minimum 36“ and a maximum 40 feet above the fireplace.

For optimum performance, it is recommended that all horizontal runs have a minimum 1/4” rise per foot. Provide a means for visually checking the vent connection to the fireplace after the fireplace is installed. Do not allow the inside liner to bunch up on horizontal or vertical runs and elbows. Keep it pulled tight. A 3/4” air gap between the inner and outer liner all around is required for safe operation. Use a firestop when penetrating interior walls, floor or ceiling.

8.4

3.2 TYPICAL VENT INSTALLATION

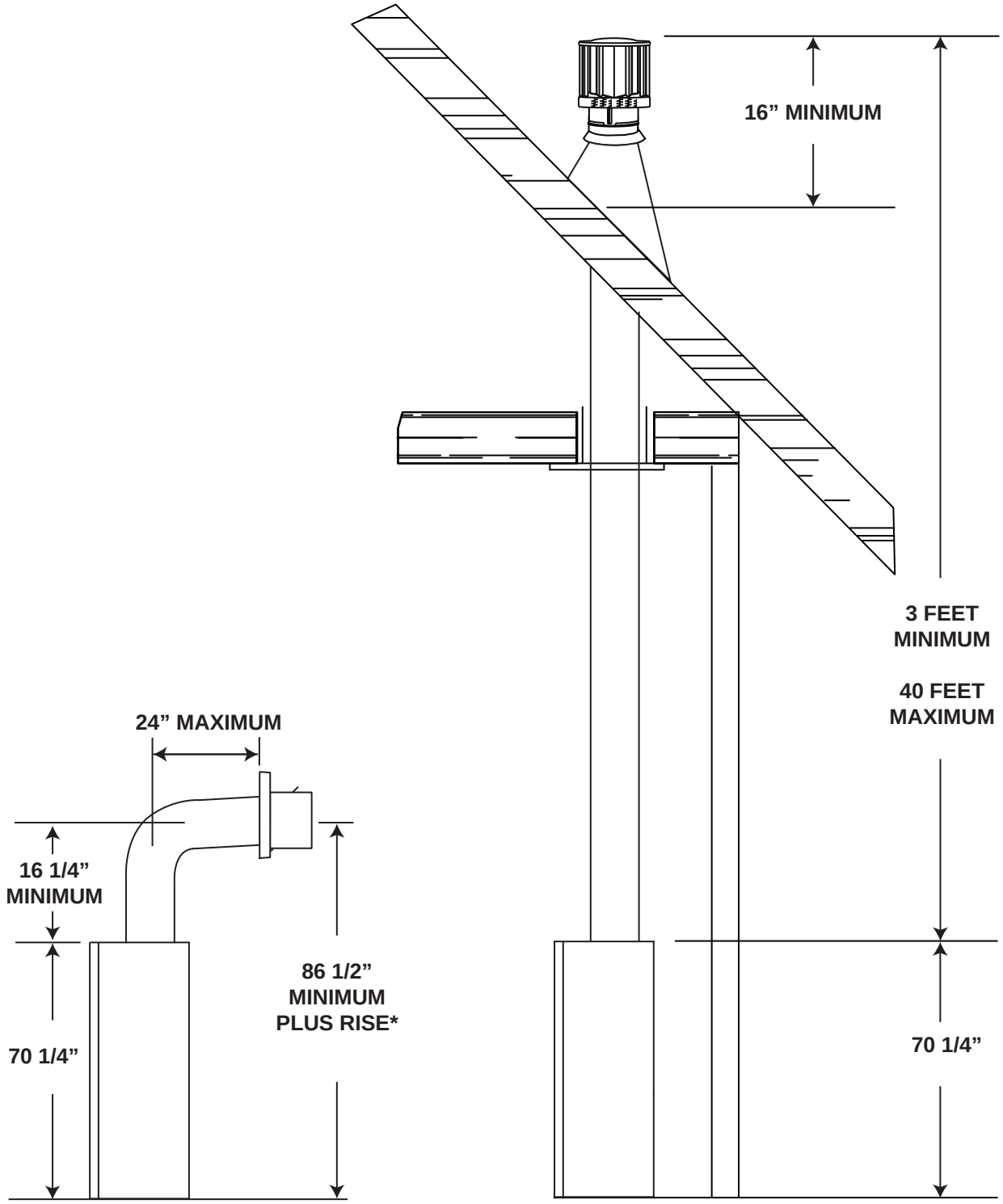

*** See “VENTING” section**

3.3 VENT TERMINAL CLEARANCES

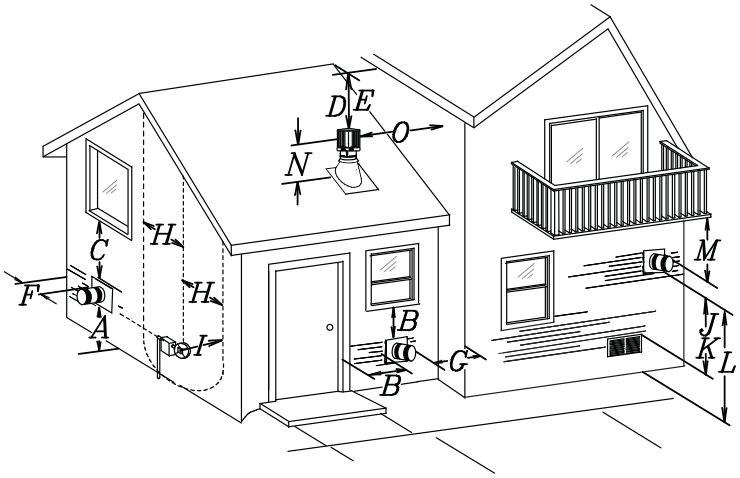

COVERED BALCONY APPLICATIONS

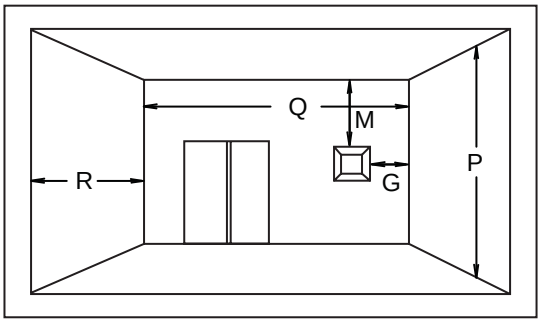

Q_{MIN}	= 3 feet
R_{MAX}	= 2 x Q_{ACTUAL}
R_{MAX}	≤ 15 feet

	INSTALLATIONS		
	CANADA	U.S.A.	
A	12”	12”	Clearance above grade, veranda porch, deck or balcony.
B	12” Δ	9” Δ	Clearance to windows or doors that open.
C	12” *	12” *	Clearance to permanently closed windows.
D	18” **	18” **	Vertical clearance to ventilated soffits located above the terminal within a horizontal distance of 2’ from the centerline of the terminal.
E	12” **	12” **	Clearance to unventilated soffit.
F	0”	0”	Clearance to an outside corner wall.
G	0” ***	0” ***	Clearance to an inside **non**-combustible corner wall or protruding **non**-combustible obstructions (chimney, etc.).
	2” ***	2” ***	Clearance to an inside combustible corner wall or protruding combustible obstructions (vent chase, etc.).
H	3’	3’ ****	Clearance to each side of the centerline extended above the meter / regulator assembly to a maximum vertical distance of 15’.
I	3’	3’ ****	Clearance to a service regulator vent outlet.
J	12”	9”	Clearance to a non-mechanical air supply inlet to the building or a combustion air inlet to any other appliance.
K	6’	3’	Clearance to a mechanical air supply inlet.
L	7’ ‡	7’ ****	Clearance above a paved sidewalk or paved driveway located on public property.
M	12” ††	12” ****	Clearance under a veranda, porch, deck or balcony.
N	16”	16”	Clearance above the roof.
O	2’ †*	2’ †*	Clearance from an adjacent wall including neighbouring buildings.
P	8’	8’	Roof must be **non**-combustible without openings.
Q	3’	3’	See chart for wider wall dimensions.
R	6’	6’	See chart for deeper wall dimensions. The terminal shall not be installed on any wall that has an opening between the terminal and the open side of the structure.

Δ The terminal shall not be located less than 6 feet under a window that opens on a horizontal plane in a structure with three walls and a roof.

* Recommended to prevent condensation on windows and thermal breakage

** It is recommended to maximize the distance to vinyl clad soffits.

*** The periscope requires a minimum 18” clearance from an inside corner.

**** This is a recommended distance. For additional requirements check local codes.

† 3 feet above if within 10 feet horizontally.

‡ A vent shall not terminate where it may cause hazardous frost or ice accumulations on adjacent property surfaces.

†† Permitted only if the veranda, porch, or deck is fully open on a minimum of two sides beneath the floor.

†* Recommended to prevent recirculation of exhaust products. For additional requirements check local codes.

Obadiah's · 406-300-1776

3.4 VENTING APPLICATION FLOW CHART

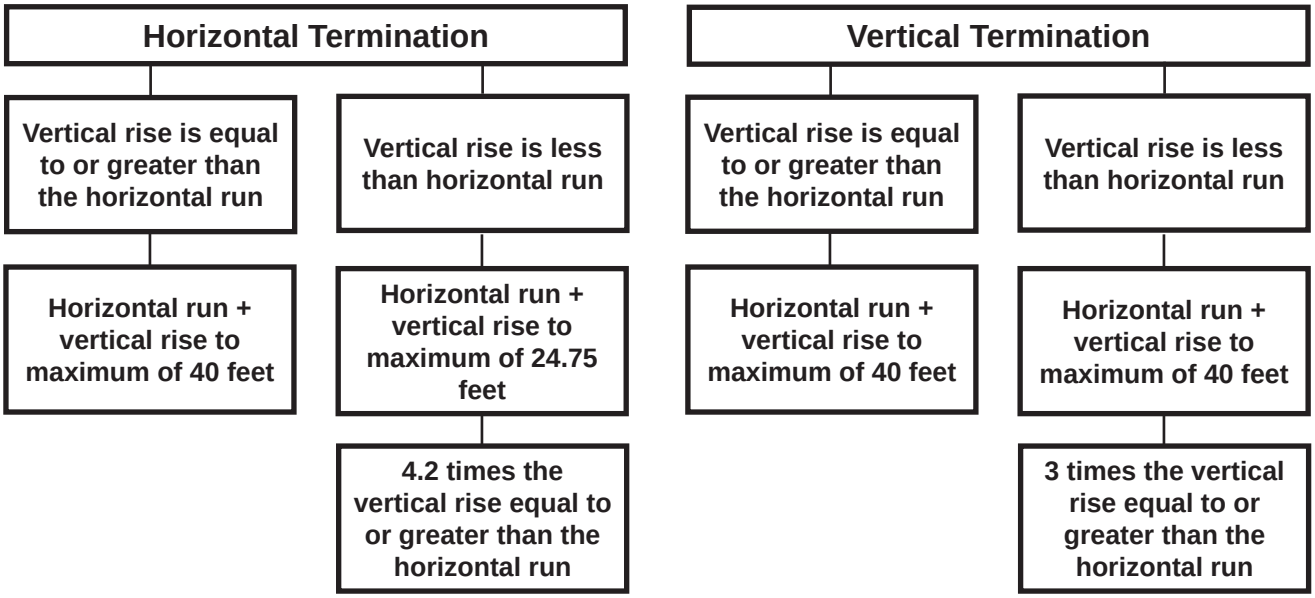

13.1

3.5 DEFINITIONS

For the following symbols used in the venting calculations and examples are:
> - greater than
≥ - equal to or greater than
< - less than
≤ - equal to or less than
H_T - total of both horizontal vent lengths (Hr) and offsets (Ho) in feet
H_R - combined horizontal vent lengths in feet
H_O - offset factor: .03 (total degrees of offset - 90°*) in feet
V_T - combined vertical vent lengths in feet

14.1

3.6 ELBOW VENT LENGTH VALUES

	FEET	INCHES
1°	0.03	0.5
15°	0.45	6.0
30°	0.9	11.0
45°	1.35	16.0
90°*	2.7	32.0

* The first 90° offset has a zero value and is shown in the formula as - 90°

15.1

3.7 TOP EXIT HORIZONTAL TERMINATION

$(H_T) \leq (V_T)$

Simple venting configuration (only one 90° elbow)

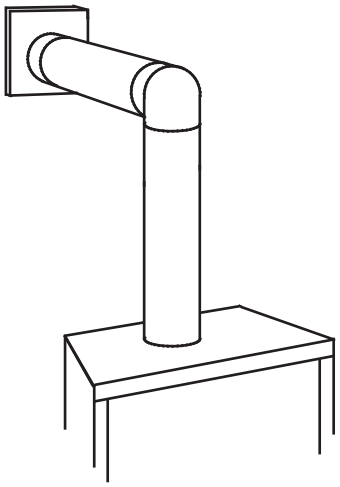

See graph to determine the required vertical rise V_T for the required horizontal run H_T.

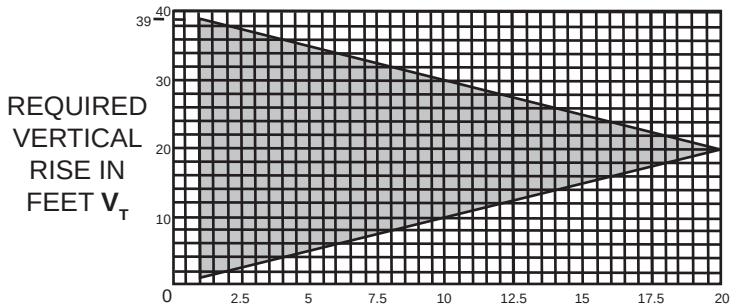

The shaded area within the lines represents acceptable values for H_T and V_T

For vent configurations requiring more than one 90° elbow, the following formulas apply:

Formula 1: $H_T \leq V_T$

Formula 2: $H_T + V_T \leq 40$ feet

Example:

V_1 = 3 FT

V_2 = 8 FT

$V_T = V_1 + V_2$ = 3 FT + 8 FT = 11 FT

H_1 = 2.5 FT

H_2 = 2 FT

$H_R = H_1 + H_2$ = 2.5 + 2 = 4.5 FT

H_O = .03 (three 90° elbows - 90°) = .03 (270° - 90°) = 5.4 FT

$H_T = H_R + H_O$ = 4.5 + 5.4 = 9.9 FT

$H_T + V_T$ = 9.9 + 11 = 20.9 FT

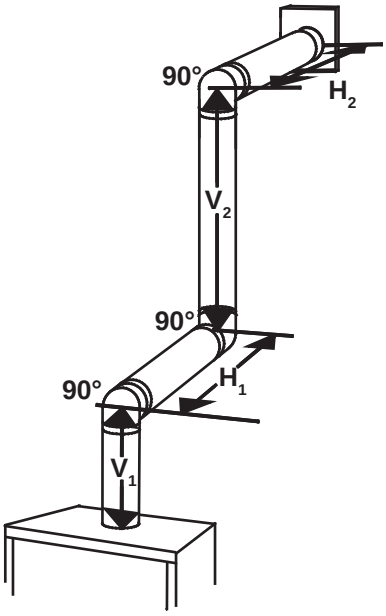

Formula 1: $H_T \leq V_T$

$9.9 \leq 11$

Formula 2: $H_T + V_T \leq$ **40 FT**

$20.9 \leq 40$

Since both formulas are met, this vent configuration is acceptable.

16.1A

$(H_T) > (V_T)$

Simple venting configuration (only one 90° elbow)

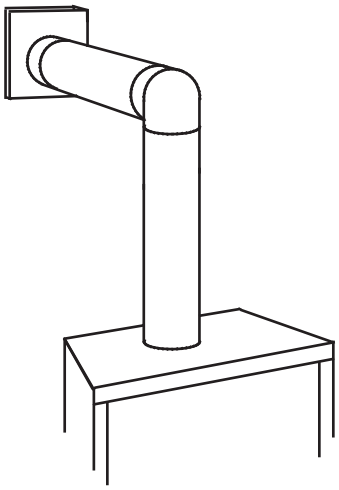

See graph to determine the required vertical rise $\mathbf{V_T}$ for the required horizontal run $\mathbf{H_T}$.

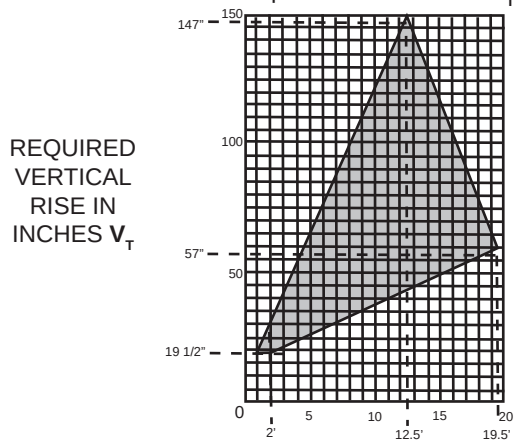

HORIZONTAL VENT RUN PLUS OFFSET IN FEET $\mathbf{H_T}$
The shaded area within the lines represents acceptable values for $\mathbf{H_T}$ and $\mathbf{V_T}$

For vent configurations requiring more than one 90° elbow, the following formulas apply:

Formula 1: $H_T \leq 4.2\ V_T$
Formula 2: $H_T + V_T \leq 24.75$ feet

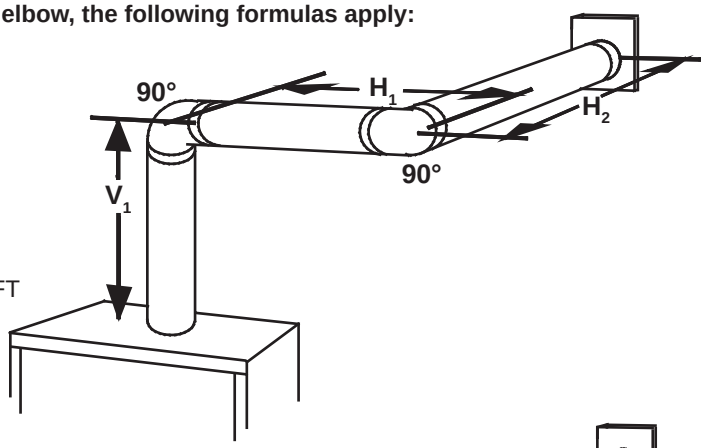

Example:
$V_1 = V_T = 6$ FT
$H_1 = 3$ FT
$H_2 = 5$ FT
$H_R = H_1 + H_2 = 3 + 5 = 8$ FT
$H_O = .03$ (two 90° elbows - 90°) = .03 (180° - 90°) = 2.7 FT
$H_T = H_R + H_O = 8 + 2.7 = 10.7$ FT
$H_T + V_T = 10.7 + 6 = 16.7$ FT

Formula 1: $H_T \leq 4.2\ V_T$
$4.2\ V_T = 4.2 \times 6 = 25.2$ FT
$10.7 \leq 25.2$
Formula 2: $H_T + V_T \leq 24.75$ FT
$16.7 \leq 24.75$
Since both formulas are met, this vent configuration is acceptable.

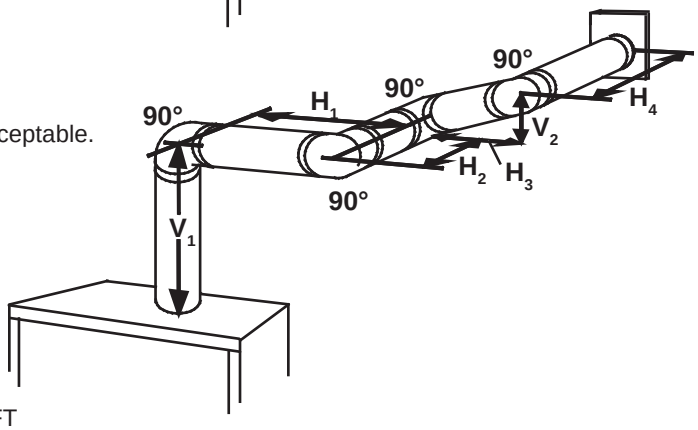

Example:
$V_1 = 4$ FT
$V_2 = 1.5$ FT
$V_T = V_1 + V_2 = 4 + 1.5 = 5.5$ FT
$H_1 = 2$ FT
$H_2 = 1$ FT
$H_3 = 1$ FT
$H_4 = 1.5$ FT
$H_R = H_1 + H_2 + H_3 + H_4 = 2 + 1 + 1 + 1.5 = 5.5$ FT
$H_O = .03$ (four 90° elbows - 90°) = .03 (360° - 90°) = 8.1 FT
$H_T = H_R + H_O = 5.5 + 8.1 = 13.6$ FT
$H_T + V_T = 13.6 + 5.5 = 19.1$ FT

Formula 1: $H_T \leq 4.2\ V_T$
$4.2\ V_T = 4.2 \times 5.5 = 23.1$ FT
$13.6 \leq 23.1$
Formula 2: $H_T + V_T \leq 24.75$ FT
$19.1 \leq 24.75$
Since both formulas are met, this vent configuration is acceptable.

Obadiah's · 406-300-1776

3.8 TOP EXIT VERTICAL TERMINATION

$(H_T) \leq (V_T)$

Simple venting configurations.

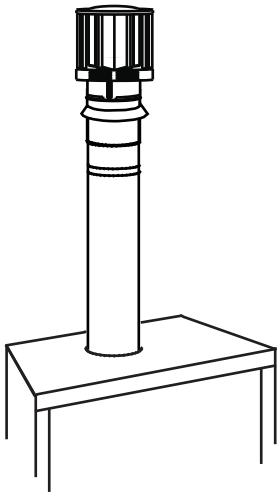

See graph to determine the required vertical rise $\mathbf{V_T}$ for the required horizontal run $\mathbf{H_T}$.

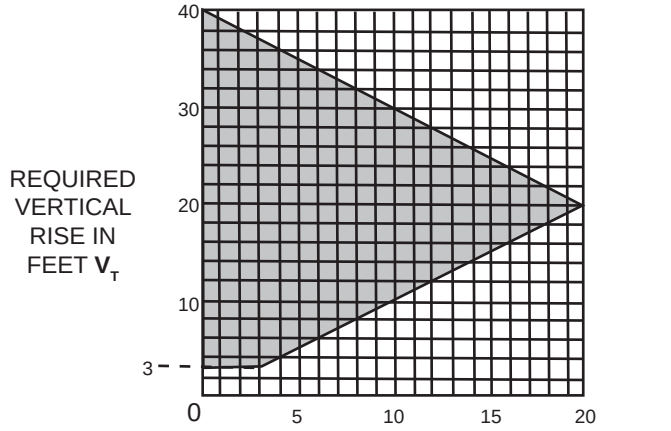

HORIZONTAL VENT RUN PLUS OFFSET IN FEET $\mathbf{H_T}$

The shaded area within the lines represents acceptable values for $\mathbf{H_T}$ and $\mathbf{V_T}$

For vent configurations requiring one or more 90° elbows the following formulas apply:

Formula 1: $H_T \leq V_T$
Formula 2: $H_T + V_T \leq 40$ feet

Example:
V_1 = 5 FT
V_2 = 6 FT
V_3 = 10 FT
$V_T = V_1 + V_2 + V_3 = 5 + 6 + 10 = 21$ FT
H_1 = 8 FT
H_2 = 2.5 FT
$H_R = H_1 + H_2 = 8 + 2.5 = 10.5$ FT
H_O = .03 (four 90° elbows - 90°)
= .03 (360° - 90°) = 8.1 FT
$H_T = H_R + H_O = 10.5 + 8.1 = 18.6$ FT
$H_T + V_T = 18.6 + 21 = 39.6$ FT

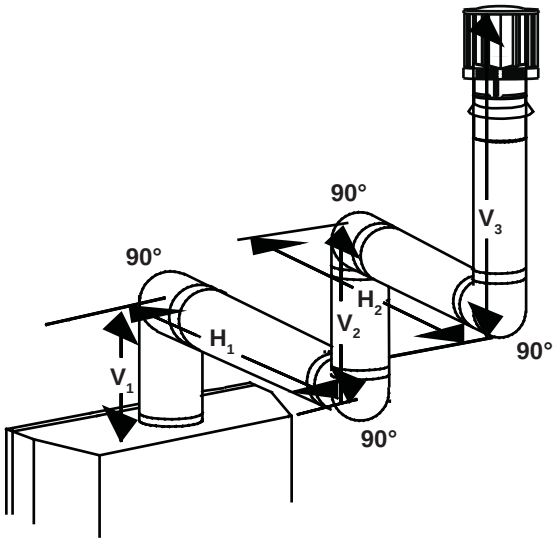

Formula 1: $\mathbf{H_T \leq V_T}$
$18.6 \leq 21$
Formula 2: $\mathbf{H_T + V_T \leq 40}$ **FT**
$39.6 \leq 40$

Since both formulas are met, this vent configuration is acceptable.

18.1

$(H_T) > (V_T)$

Simple venting configurations.

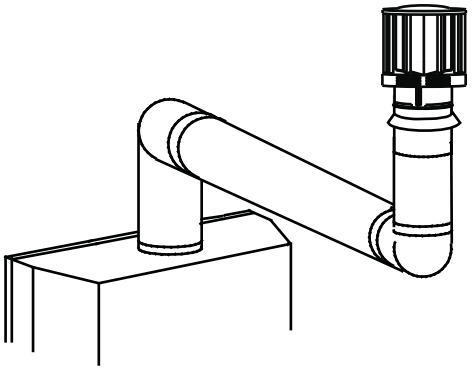

See graph to determine the required vertical rise $\mathbf{V_T}$ for the required horizontal run $\mathbf{H_T}$.

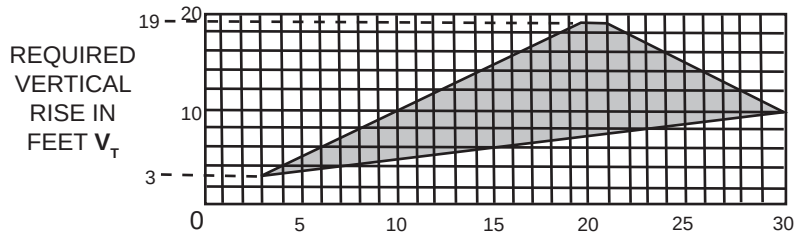

HORIZONTAL VENT RUN PLUS OFFSET IN FEET $\mathbf{H_T}$

The shaded area within the lines represents acceptable values for $\mathbf{H_T}$ and $\mathbf{V_T}$

For vent configurations requiring more than two 90° elbows the following formulas apply:

Formula 1: $H_T \leq 3V_T$
Formula 2: $H_T + V_T \leq 40$ feet

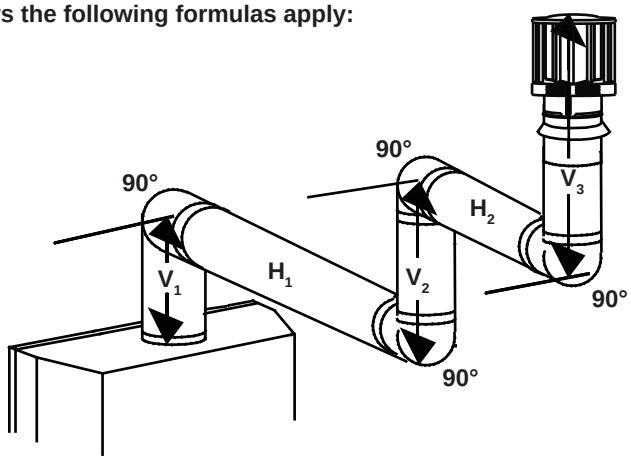

Example:
$\mathbf{V_1}$ = 2 FT
$\mathbf{V_2}$ = 1 FT
$\mathbf{V_3}$ = 1.5 FT
$\mathbf{V_T} = \mathbf{V_1} + \mathbf{V_2} + \mathbf{V_3}$ = 2 + 1 + 1.5 = 4.5 FT
$\mathbf{H_1}$ = 6 FT
$\mathbf{H_2}$ = 2 FT
$\mathbf{H_R} = \mathbf{H_1} + \mathbf{H_2}$ = 6 + 2 = 8 FT
$\mathbf{H_O}$ = .03 (four 90° elbows - 90°)
= .03 (360° - 90°) = 8.1 FT
$\mathbf{H_T} = \mathbf{H_R} + \mathbf{H_O}$ = 8 + 8.1 = 16.1 FT
$\mathbf{H_T} + \mathbf{V_T}$ = 16.1 + 4.5 = 20.6 FT

Formula 1: $\mathbf{H_T \leq 3V_T}$
$\mathbf{3V_T}$ = 3 x 4.5 = 13.5 FT
16.1 > 13.5

Since this formula is not met, this vent configuration is **<u>un</u>acceptable.**

Formula 2: $\mathbf{H_T + V_T \leq 40}$ **feet**
20.6 ≤ 40

Since only formula 2 is met, this vent configuration is unacceptable and a new appliance location or vent configuration will need to be established to satisfy both formulas.

18.1_2A

4.0 INSTALLATION

⚠ WARNING

FOR SAFE AND PROPER OPERATION OF THE APPLIANCE, FOLLOW THE VENTING INSTRUCTIONS EXACTLY.

ALL INNER EXHAUST AND OUTER INTAKE VENT PIPE JOINTS MAY BE SEALED USING EITHER RED RTV HIGH TEMP SILICONE SEALANT W573-0002 (NOT SUPPLIED) OR BLACK HIGH TEMP MILL PAC W573-0007 (NOT SUPPLIED) WITH THE EXCEPTION OF THE APPLIANCE EXHAUST FLUE COLLAR WHICH MUST BE SEALED USING MILL PAC.

IF USING PIPE CLAMPS TO CONNECT VENT COMPONENTS, 3 SCREWS MUST ALSO BE USED TO ENSURE THE CONNECTION CANNOT SLIP OFF.

DO NOT CLAMP THE FLEXIBLE VENT PIPE.

RISK OF FIRE, EXPLOSION OR ASPHYXIATION. IMPROPER SUPPORT OF THE ENTIRE VENTING SYSTEM MAY ALLOW VENT TO SAG AND SEPARATE. USE VENT RUN SUPPORTS AND CONNECT VENT SECTIONS PER INSTALLATION INSTRUCTIONS.

RISK OF FIRE, DO NOT ALLOW LOOSE MATERIALS OR INSULATION TO TOUCH THE VENT PIPE. REMOVE INSULATION TO ALLOW FOR THE INSTALLATION OF THE ATTIC SHIELD AND TO MAINTAIN CLEARANCES TO COMBUSTIBLES.

68.2A

4.1 WALL AND CEILING PROTECTION

⚠ WARNING

DO NOT FILL THE SPACE BETWEEN THE VENT PIPE AND ENCLOSURE WITH ANY TYPE OF MATERIAL. DO NOT PACK INSULATION OR COMBUSTIBLES BETWEEN CEILING FIRESTOPS. ALWAYS MAINTAIN SPECIFIED CLEARANCES AROUND VENTING AND FIRESTOP SYSTEMS. INSTALL WALL SHIELDS AND FIRESTOPS AS SPECIFIED. FAILURE TO KEEP INSULATION OR OTHER MATERIALS AWAY FROM VENT PIPE MAY CAUSE FIRE.

70.1

For clearances to combustible materials from the vent pipe, see “FRAMING” section.

4.1.1 HORIZONTAL INSTALLATION

⚠ WARNING

THE FIRESTOP ASSEMBLY MUST BE INSTALLED WITH THE VENT SHIELD TO THE TOP.

TERMINALS MUST NOT BE RECESSED INTO A WALL OR SIDING MORE THAN THE DEPTH OF THE RETURN FLANGE OF THE MOUNTING PLATE.

This application occurs when venting through an exterior wall. Having determined the correct height for the air terminal location, cut and frame a hole in the exterior wall as illustrated to accommodate the firestop assembly. Dry fit the firestop assembly before proceeding to ensure the brackets on the rear surface fit to the inside surface of the horizontal framing.

The length of the vent shield may be cut shorter for combustible walls that are less than 8 1/2" thick but the vent shield must extend the full depth of the combustible wall.

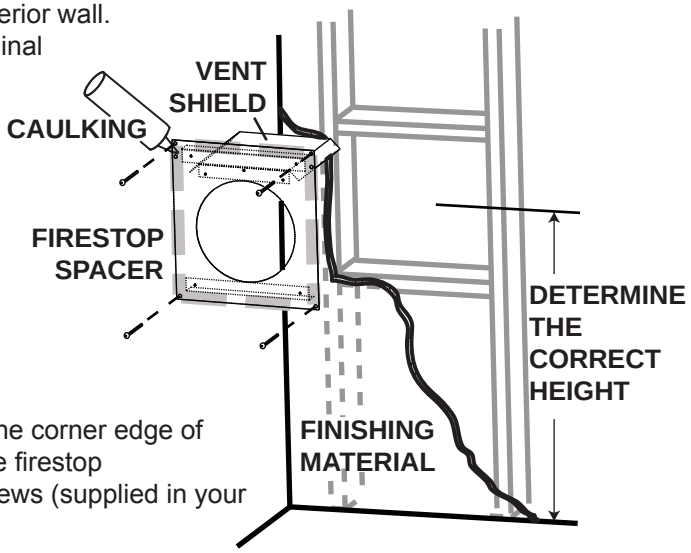

A. Apply a bead of caulking (not supplied) around the corner edge of the inside surface of the firestop assembly, fit the firestop assembly to the hole and secure using the 4 screws (supplied in your manual baggie).

B. Once the vent pipe is installed in its final position, apply high temperature sealant W573-0007 (not supplied) between the pipe and the firestop.

20.2

4.1.2 VERTICAL INSTALLATION

This application occurs when venting through a roof. Installation kits for various roof pitches are available from your authorized dealer / distributor. See accessories to order specific kits required.

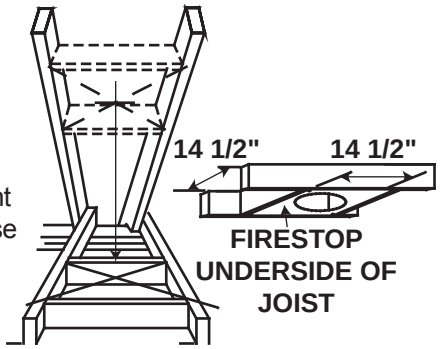

A. Determine the air terminal location, cut and frame a square opening as illustrated in the ceiling and the roof to provide the minimum 1" clearance between the vent pipe and any combustible material. Try to center the vent pipe location midway between two joists to prevent having to cut them. Use a plumb bob to line up the center of the openings. A vent pipe shield will prevent any materials such as insulation, from filling up the 1" air space around the pipe. Nail headers between the joist for extra support.

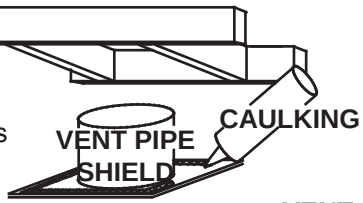

B. Apply a bead of caulking (not supplied) to the framework or to the Wolf Steel vent pipe shield plate or equivalent (in the case of a finished ceiling), and secure over the opening in the ceiling. A firestop must be placed on the bottom of each framed opening in a roof or ceiling that the venting system passes through. Apply a bead of caulking all around and place a firestop spacer over the vent shield to restrict cold air from being drawn into the room or around the fireplace. Ensure that both spacer and shield maintain the required clearance to combustibles. Once the vent pipe is installed in its final position, apply sealant between the pipe and the firestop assembly.

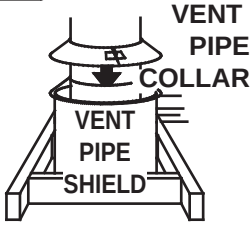

C. In the attic, slide the vent pipe collar down to cover up the open end of the shield and tighten. This will prevent any materials, such as insulation, from filling up the 1" air space around the pipe.

21.1

4.2 USING FLEXIBLE VENT COMPONENTS

⚠ WARNING

DO NOT ALLOW THE INNER FLEX PIPE TO BUNCH UP ON HORIZONTAL OR VERTICAL RUNS AND ELBOWS. KEEP IT PULLED TIGHT.

SPACERS ARE ATTACHED TO THE INNER FLEX PIPE AT PREDETERMINED INTERVALS TO MAINTAIN AN EVEN AIR GAP TO THE OUTER FLEX PIPE. THIS GAP IS REQUIRED FOR SAFE OPERATION. A SPACER IS REQUIRED AT THE START, MIDDLE AND END OF EACH ELBOW TO ENSURE THIS GAP IS MAINTAINED. THESE SPACERS MUST NOT BE REMOVED.

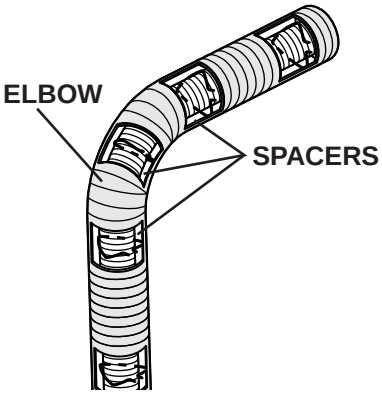

For safe and proper operation of the appliance, follow the venting instructions exactly.
All inner flex pipe and outer flex pipe joints may be sealed using high temperature sealant W573-0002 (not supplied) or the high temperature sealant W573-0007 Mill Pac (not supplied). However, the high temperature sealant W573-0007 Mill Pac (not supplied) must be used on the joint connecting the inner flex pipe and the exhaust flue collar.
Use only approved flexible vent pipe kits marked:

"Wolf Steel Approved Venting" as identified by the stamp only on the outer flex pipe.

22.1

4.2.1 HORIZONTAL AIR TERMINAL INSTALLATION

A. Stretch the inner flex pipe to the required length taking into account the additional length needed for the finished wall surface. Apply a heavy bead of the high temperature sealant W573-0007 Mill Pac (not supplied) to the inner sleeve of the air terminal. Slip the vent pipe a minimum of 2" over the inner sleeve of the air terminal and secure with 6 #8 screws.

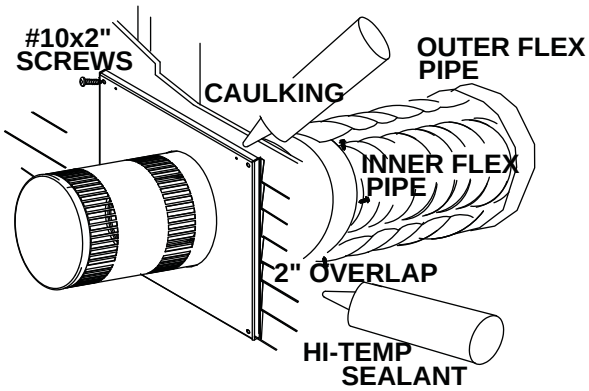

B. Using the outer flex pipe, slide over the outer combustion air sleeve of the air terminal and secure with 6 #8 screws. Seal using high temperature sealant W573-0002 (not supplied).

C. Insert the vent pipes through the firestop maintaining the required clearance to combustibles. Holding the air terminal (lettering in an upright, readable position), secure to the exterior wall and make weather tight by sealing with caulking (not supplied).

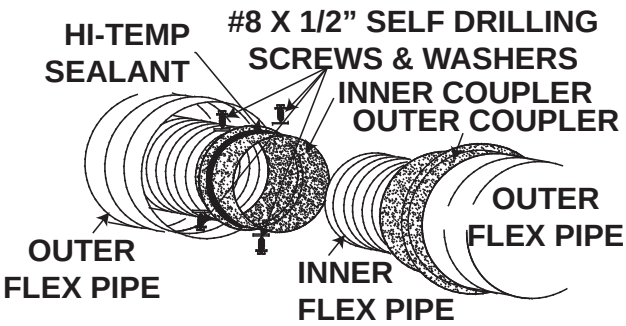

D. If more vent pipe needs to be used to reach the fireplace, couple them together as illustrated. The vent system must be supported approximately every 3 feet for both vertical and horizontal runs. Use noncombustible strapping to maintain the minimum 1" clearance to combustibles.

The air terminal mounting plate may be recessed into the exterior wall or siding no greater than the depth of its return flange.

23.4A

4.2.2 VERTICAL AIR TERMINAL INSTALLATION

⚠ WARNING

MAINTAIN A MINIMUM 2” SPACE BETWEEN THE AIR INLET BASE AND THE STORM COLLAR.

A. Fasten the roof support to the roof using the screws provided. The roof support is optional. In this case the venting is to be adequately supported using either an alternate method suitable to the authority having jurisdiction or the optional roof support.

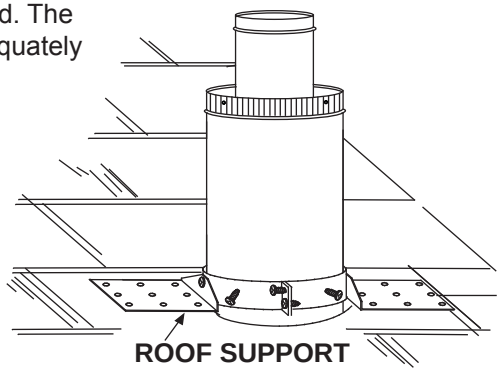

B. Stretch the inner flex pipe to the required length. Slip the inner flex pipe a minimum of 2” over the inner pipe of the air terminal connector and secure with 6 #8 screws. Seal using a heavy bead of high temperature sealant W573-0007 (not supplied).

C. Repeat using the outer flex pipe, using a heavy bead of high temperature sealant W573-0002 (not supplied).

D. Thread the air terminal connector / vent pipe assembly down through the roof. The air terminal must be positioned vertically and plumb. Attach the air terminal connector to the roof support, ensuring that the top of the air terminal is 16” above the highest point that it penetrates the roof.

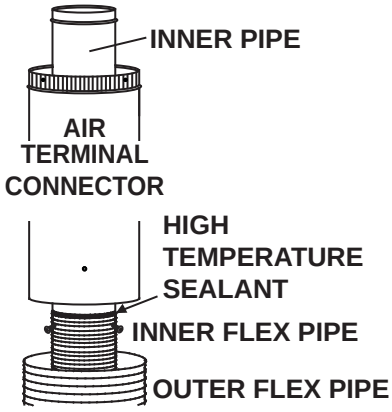

E. Remove nails from the shingles, above and to the sides of the air terminal connector. Place the flashing over the air terminal connector leaving a min. 3/4” of the air terminal connector showing above the top of the flashing. Slide the flashing underneath the sides and upper edge of the shingles. Ensure that the air terminal connector is properly centred within the flashing, giving a 3/4” margin all around. Fasten to the roof. Do not nail through the lower portion of the flashing. Make weather-tight by sealing with caulking. Where possible, cover the sides and top edges of the flashing with roofing material.

F. Aligning the seams of the terminal and air terminal connector, place the terminal over the air terminal connector making sure the vent pipe goes into the hole in the terminal. Secure with the three screws provided.

G. Apply a heavy bead of weatherproof caulking 2” above the flashing. Install the storm collar around the air terminal and slide down to the caulking. Tighten to ensure that a weather-tight seal between the air terminal and the collar is achieved.

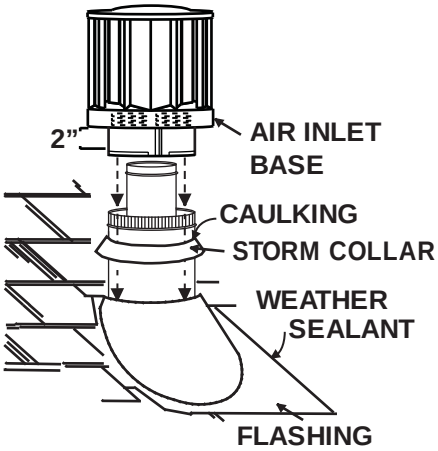

H. If more vent pipe needs to be used to reach the fireplace see “HORIZONTAL AIR TERMINAL INSTALLATION” section.

24.2

4.2.3 APPLIANCE VENT CONNECTION

A. Install the inner flex pipe to the appliance. Secure with 3 screws and flat washers. Seal the joint and screw holes using the high temperature sealant W573-0007 (not supplied).

B. Install the outer flex pipe to the appliance. Attach and seal the joints using the high temperature sealant W573-0002 (not supplied).

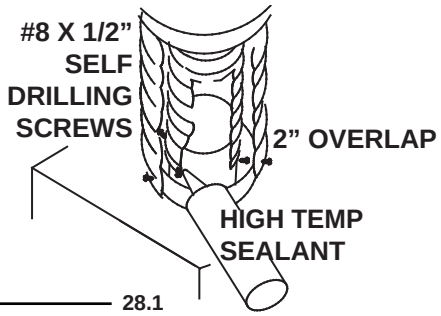

28.1

4.3 MOBILE HOME INSTALLATION

This appliance is certified to be installed as an OEM (Original Equipment Manufacturer) installation in a manufactured home or mobile home and must be installed in accordance with the manufacturer's instructions and the Manufactured Home Construction and Safety Standard, Title 24 CFR, Part 3280, in the United States or the Mobile Home Standard, CAN/CSA Z240 MH Series, in Canada. This appliance is only for use with the type(s) of gas indicated on the rating plate. A conversion kit is supplied with the mobile home appliance.

This Mobile/Manufactured Home Listed appliance comes factory equipped with a means to secure the unit. Built in appliances are equipped with 1/4" diameter holes located in the front left and right corners of the base. Use #10 hex head screws, inserted through the holes in the base to secure. For free standing products contact your local authorized dealer / distributor for the appropriate securing kit. For mobile home installations, the appliance must be fastened in place. It is recommended that the appliance be secured in all installations. Always turn off the pilot and the fuel supply at the source, prior to moving the mobile home. After moving the mobile home and prior to lighting the appliance, ensure that the logs are positioned correctly.

This appliance is certified to be installed in an aftermarket permanently located, manufactured (mobile) home, where not prohibited by local codes.
This appliance is only for use with the type of gas indicated on the rating plate. This appliance is not convertible for use with other gases, unless a certified kit is used.

Conversion Kits
This appliance is field convertible between Natural Gas (NG) and Propane (LP).
To convert from one gas to another consult your Authorized dealer/distributor.

29.1

4.4 GAS INSTALLATION

⚠ WARNING
RISK OF FIRE, EXPLOSION OR ASPHYXIATION. ENSURE THERE ARE NO IGNITION SOURCES SUCH AS SPARKS OR OPEN FLAMES.
SUPPORT GAS CONTROL WHEN ATTACHING GAS SUPPLY PIPE TO PREVENT DAMAGING GAS LINE.
ALWAYS LIGHT THE PILOT WHETHER FOR THE FIRST TIME OR IF THE GAS SUPPLY HAS RUN OUT WITH THE GLASS DOOR OPENED OR REMOVED. PURGING OF THE GAS SUPPLY LINE SHOULD BE PERFORMED BY A QUALIFIED SERVICE TECHNICIAN. ASSURE THAT A CONTINUOUS GAS FLOW IS AT THE BURNER BEFORE CLOSING THE DOOR. ENSURE ADEQUATE VENTILATION. FOR GAS AND ELECTRICAL LOCATIONS, SEE "DIMENSION" SECTION.
ALL GAS CONNECTIONS MUST BE CONTAINED WITHIN THE APPLIANCE WHEN COMPLETE.
HIGH PRESSURE WILL DAMAGE VALVE. DISCONNECT GAS SUPPLY PIPING BEFORE TESTING GAS LINE AT TEST PRESSURES ABOVE 1/2 PSIG.
VALVE SETTINGS HAVE BEEN FACTORY SET, DO NOT CHANGE.

Installation and servicing to be done by a qualified installer.

A. Move the appliance into position and secure.

B. If equipped with a flex connector the appliance is designed to accept a 1/2" gas supply. Without the connector it is designed to accept a 3/8" gas supply. The appliance is equipped with a manual shut off valve to turn off the gas supply to the appliance.

C. Connect the gas supply in accordance to local codes. In the absence of local codes, install to the current CAN/CSA-B149.1 Installation Code in Canada or to the current National Fuel Gas Code, ANSI Z223.1 / NFPA 54 in the United States.

D. When flexing any gas line, support the gas valve so that the lines are not bent or kinked.

E. The gas line flex-connector should be installed to provide sufficient movement for shifting the burner assembly on it's side to aid with servicing components.

F. Check for gas leaks by brushing on a soap and water solution. **Do not use open flame.**

30.1A

5.0 FRAMING

⚠ WARNING

RISK OF FIRE!

IN ORDER TO AVOID THE POSSIBILITY OF EXPOSED INSULATION OR VAPOUR BARRIER COMING IN CONTACT WITH THE APPLIANCE BODY, IT IS RECOMMENDED THAT THE WALLS OF THE APPLIANCE ENCLOSURE BE “FINISHED” (IE: DRYWALL / SHEETROCK), AS YOU WOULD FINISH ANY OTHER OUTSIDE WALL OF A HOME. THIS WILL ENSURE THAT CLEARANCE TO COMBUSTIBLES IS MAINTAINED WITHIN THE CAVITY.

DO NOT NOTCH THE FRAMING AROUND THE APPLIANCE STAND-OFFS. FAILURE TO MAINTAIN AIR SPACE CLEARANCE MAY CAUSE OVER HEATING AND FIRE. PREVENT CONTACT WITH SAGGING OR LOOSE INSULATION OR FRAMING AND OTHER COMBUSTIBLE MATERIALS. BLOCK OPENING INTO THE CHASE TO PREVENT ENTRY OF BLOWN-IN INSULATION. MAKE SURE INSULATION AND OTHER MATERIALS ARE SECURED.

WHEN CONSTRUCTING THE ENCLOSURE ALLOW FOR FINISHING MATERIAL THICKNESS TO MAINTAIN CLEARANCES. FRAMING OR FINISHING MATERIAL CLOSER THAN THE MINIMUMS LISTED MUST BE CONSTRUCTED ENTIRELY OF NON-COMBUSTIBLE MATERIALS. MATERIALS CONSISTING ENTIRELY OF STEEL, IRON, BRICK, TILE, CONCRETE, SLATE, GLASS OR PLASTERS, OR ANY COMBINATION THEREOF ARE SUITABLE. MATERIALS THAT ARE REPORTED AS PASSING ASTM E 136, STANDARD TEST METHOD FOR BEHAVIOUR OF MATERIALS IN A VERTICAL TUBE FURNACE AT 750°C AND UL763 SHALL BE CONSIDERED NON-COMBUSTIBLE MATERIALS.

MINIMUM CLEARANCE TO COMBUSTIBLES MUST BE MAINTAINED OR A SERIOUS FIRE HAZARD COULD RESULT.

THE APPLIANCE REQUIRES A MINIMUM ENCLOSURE HEIGHT. MEASURE FROM THE APPLIANCE BASE.

IF STEEL STUD FRAMING KITS WITH CEMENT BOARD ARE PROVIDED, THEY MUST BE INSTALLED.

71.1

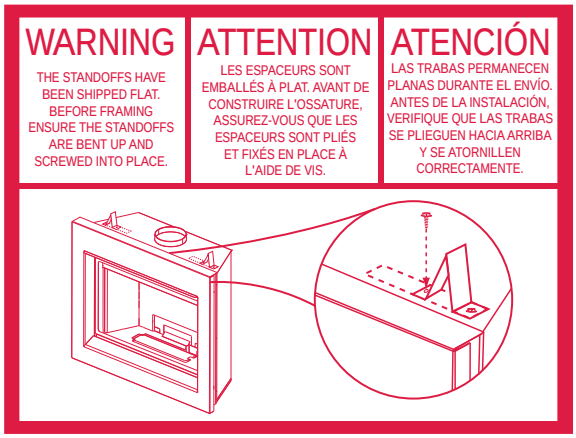

The *Dream*™ can be installed with a rectangular opening.

It is best to frame your appliance after it is positioned and the vent system is installed. Use 2x4’s and frame to local building codes.

For convenience, the stand-offs have been shipped flat. Before framing, ensure the stand-offs are opened and screwed in place.

It is not necessary to install a hearth extension, but the appliance should be raised to be flush with either the hearth or the finished floor.

When roughing in the appliance, raise the appliance to accommodate for the thickness of the finished floor materials, i.e. tile, carpeting, hard wood, which if not planned for will interfere with the removal of the hearth strip, which must be removed to access the firebox.

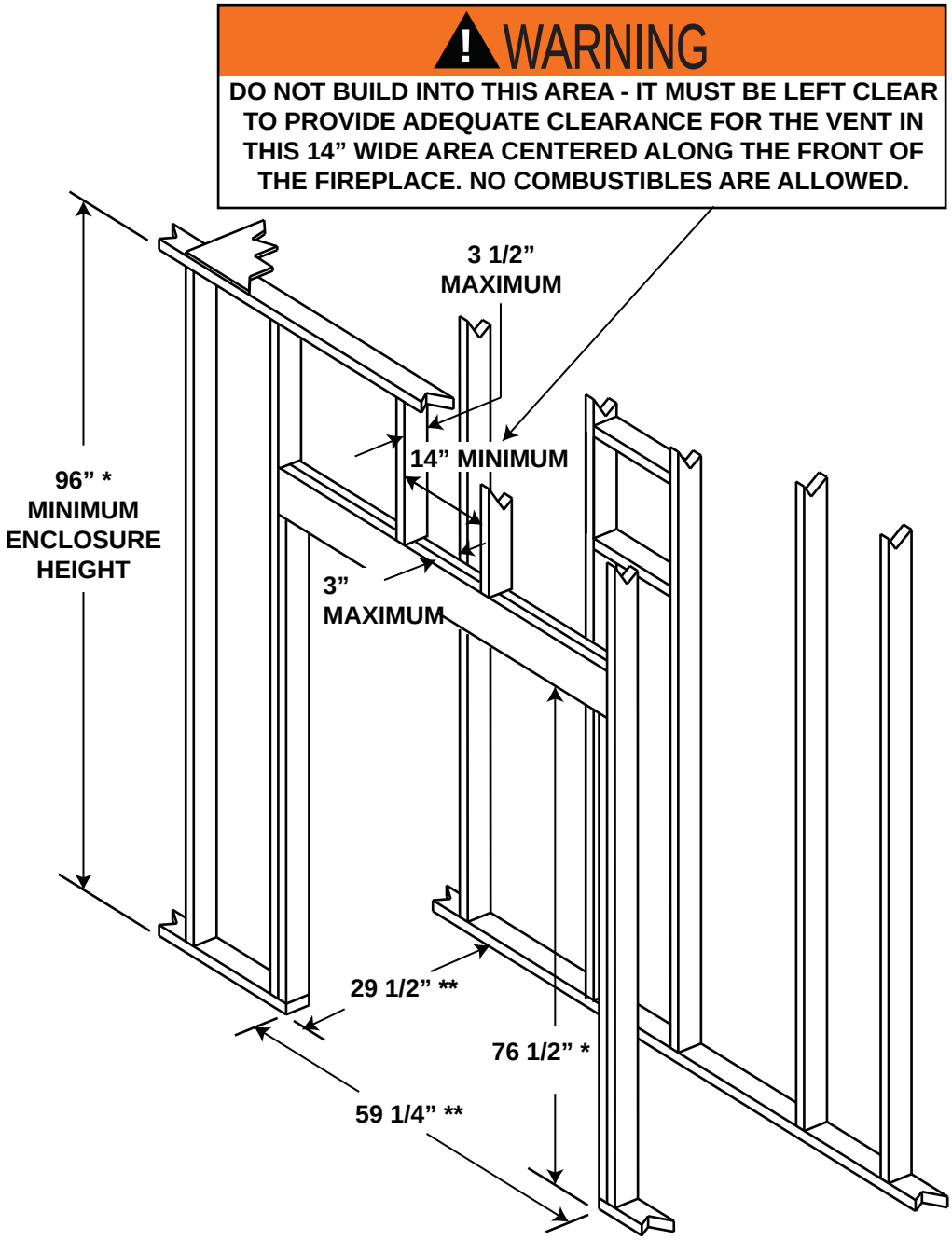

* Allow for finished floor and hearth thickness when setting these dimensions
** When constructing the enclosure allow for finishing material thickness to maintain clearances.

5.1 MINIMUM CLEARANCE TO COMBUSTIBLES

COMBUSTIBLE FRAMING:	
Sides, back, bottom and top of the appliance	0” to stand-offs
COMBUSTIBLE FINISHING:	
Rear	0”
Recessed depth	29 1/2”
Enclosure top	96” from base of appliance
Sides, bottom and top of vent pipe*	2”
Ceiling	96” from base of appliance

* **HORIZONTAL VENT SECTIONS:** A minimum clearance of 2” all around the vent pipe on all horizontal runs to combustibles is required except for clearances in appliance enclosures**. Use firestop spacer assembly W010-1797 (supplied).

* **VERTICAL VENT SECTIONS:** A minimum of 1” all around the vent pipe on all vertical runs to combustibles is required except for clearances in appliance enclosures**. Use firestop spacer W615-0075 (not supplied).

** Horizontal and vertical sections require 5” and 9” clearance from combustibles, respectively. See “MINIMUM ENCLOSURE CLEARANCES” section.

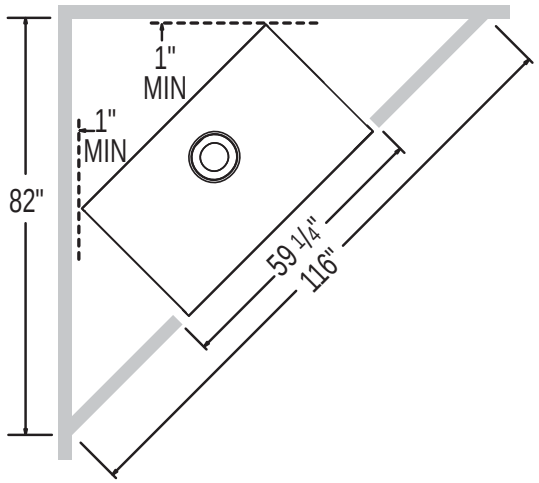

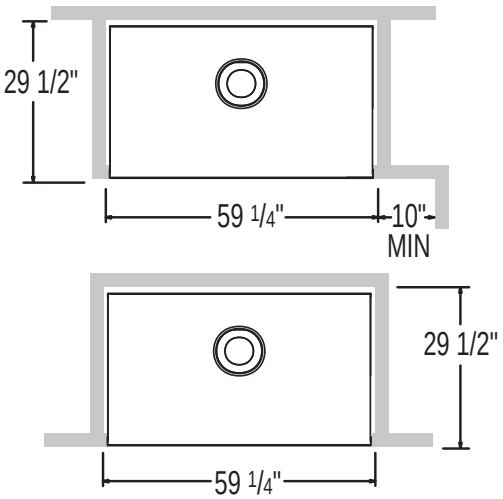

⚠ WARNING

FACING AND/OR FINISHING MATERIAL MUST NEVER OVERHANG INTO THE APPLIANCE OPENING.

USE ONLY NON-COMBUSTIBLE MATERIAL SUCH AS CEMENT BOARD, CERAMIC TILE, MARBLE, ETC. WHEN FINISHING TO THE APPLIANCE. DO NOT USE WOOD OR DRYWALL.

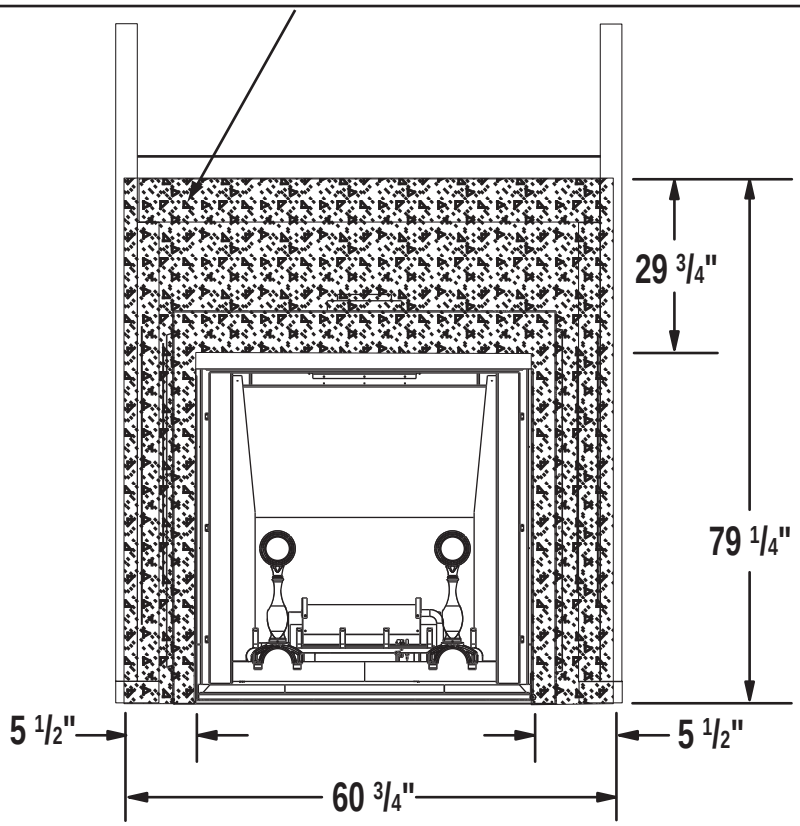

It is recommended that the walls of the appliance enclosure be finished. This would ensure that clearance to combustibles is maintained within the cavity.

5.2 MINIMUM ENCLOSURE CLEARANCES

⚠ WARNING

RISK OF FIRE!

THE FRONT OF THE APPLIANCE MUST BE FINISHED WITH ANY NON-COMBUSTIBLE MATERIALS SUCH AS BRICK, MARBLE, GRANITE, ETC., PROVIDED THAT THESE MATERIALS DO NOT COVER THE APPLIANCE OPENING.

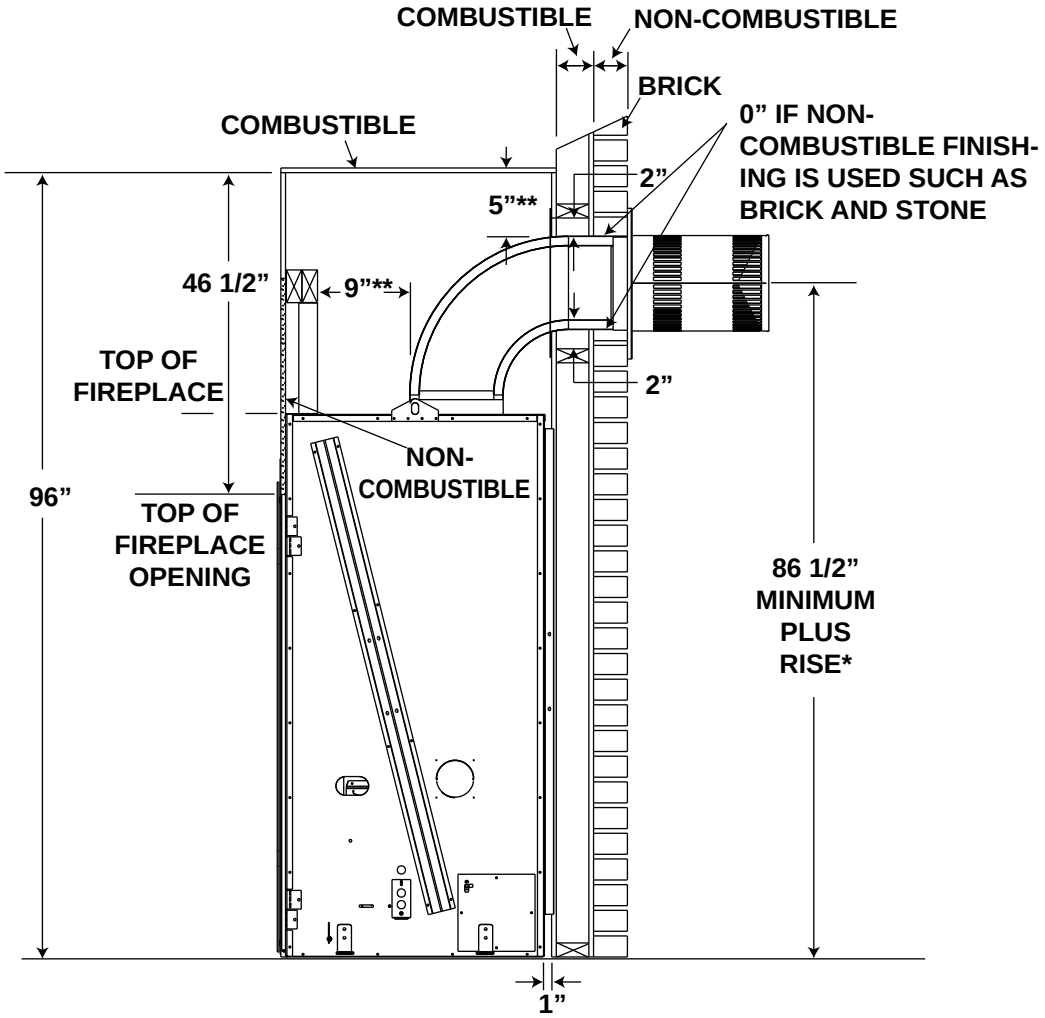

IMPORTANT:

The *Dream*™ requires a minimum inside enclosure height of 96” measured from the bottom of the appliance. For temperature requirements, this area must be left unobstructed.

It is recommended that the enclosure be ventilated at the top and bottom to circulate the hot air with 2, 40” square openings.

* See Venting Section

** Within the appliance enclosure a 9” clearance between the vertical vent run and the combustible materials on the front facing of the enclosure is required. Similarly, a 5” clearance to combustible materials from the top of the horizontal vent run is required. All other clearances within the enclosure, including where the vent pipe exits the enclosure are subject to 2” for horizontal and 1” for vertical.

5.3 MINIMUM MANTEL CLEARANCES

⚠ WARNING

RISK OF FIRE, MAINTAIN ALL SPECIFIED AIR SPACE CLEARANCES TO COMBUSTIBLES. FAILURE TO COMPLY WITH THESE INSTRUCTIONS MAY CAUSE A FIRE OR CAUSE THE APPLIANCE TO OVERHEAT. ENSURE ALL CLEARANCES (I.E. BACK, SIDE, TOP, VENT, MANTEL, FRONT, ETC.) ARE CLEARLY MAINTAINED.

WHEN USING PAINT OR LACQUER TO FINISH THE MANTEL, THE PAINT OR LACQUER MUST BE HEAT RESISTANT TO PREVENT DISCOLOURATION.

73.1

Combustible mantel clearance can vary according to the mantel depth. Use the graph to help evaluate the clearance needed.

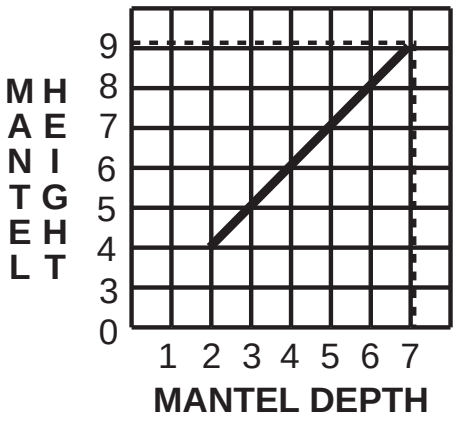

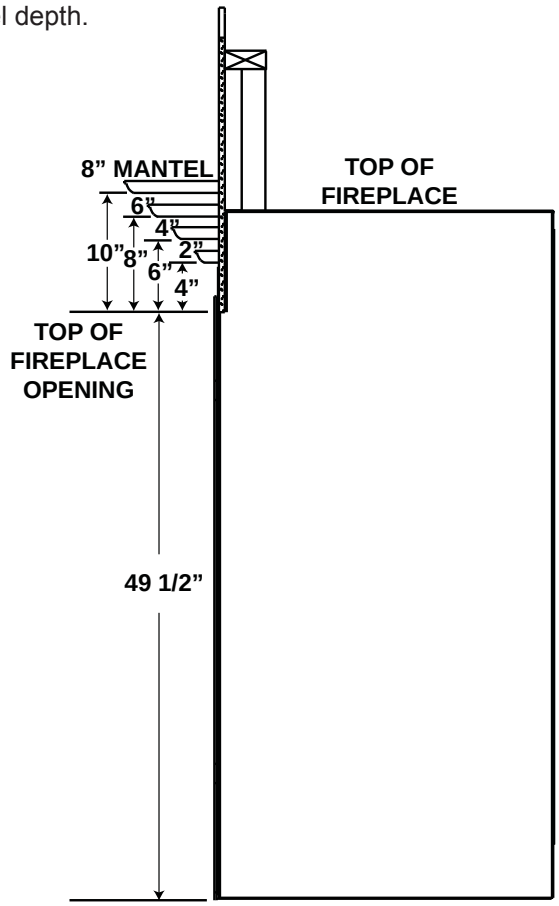

6.0 ELECTRICAL CONNECTION

⚠ WARNING

DO NOT USE THIS APPLIANCE IF ANY PART HAS BEEN UNDER WATER. CALL A QUALIFIED SERVICE TECHNICIAN IMMEDIATELY TO HAVE THE APPLIANCE INSPECTED FOR DAMAGE TO THE ELECTRICAL CIRCUIT.

RISK OF ELECTRICAL SHOCK OR EXPLOSION. DO NOT WIRE 110V TO THE VALVE OR TO THE APPLIANCE WALL SWITCH. INCORRECT WIRING WILL DAMAGE CONTROLS.

ALL WIRING SHOULD BE DONE BY A QUALIFIED ELECTRICIAN AND SHALL BE IN COMPLIANCE WITH LOCAL CODES. IN THE ABSENCE OF LOCAL CODES, USE THE CURRENT CSA22.1 CANADIAN ELECTRIC CODE IN CANADA OR THE CURRENT NATIONAL ELECTRIC CODE ANSI/NFPA NO. 70 IN THE UNITED STATES.

ALWAYS LIGHT THE PILOT WHETHER FOR THE FIRST TIME OR IF THE GAS SUPPLY HAS RAN OUT, WITH THE GLASS DOOR OPENED OR REMOVED.

69.2

If access to the control area is necessary before installation, remove the access panel. Located along the right side of firebox.

The access panel must be re-installed before operating the appliance.

It is necessary to hard wire this appliance.

Permanently framing the appliance with an enclosure, requires the appliance junction box to be hard wired.

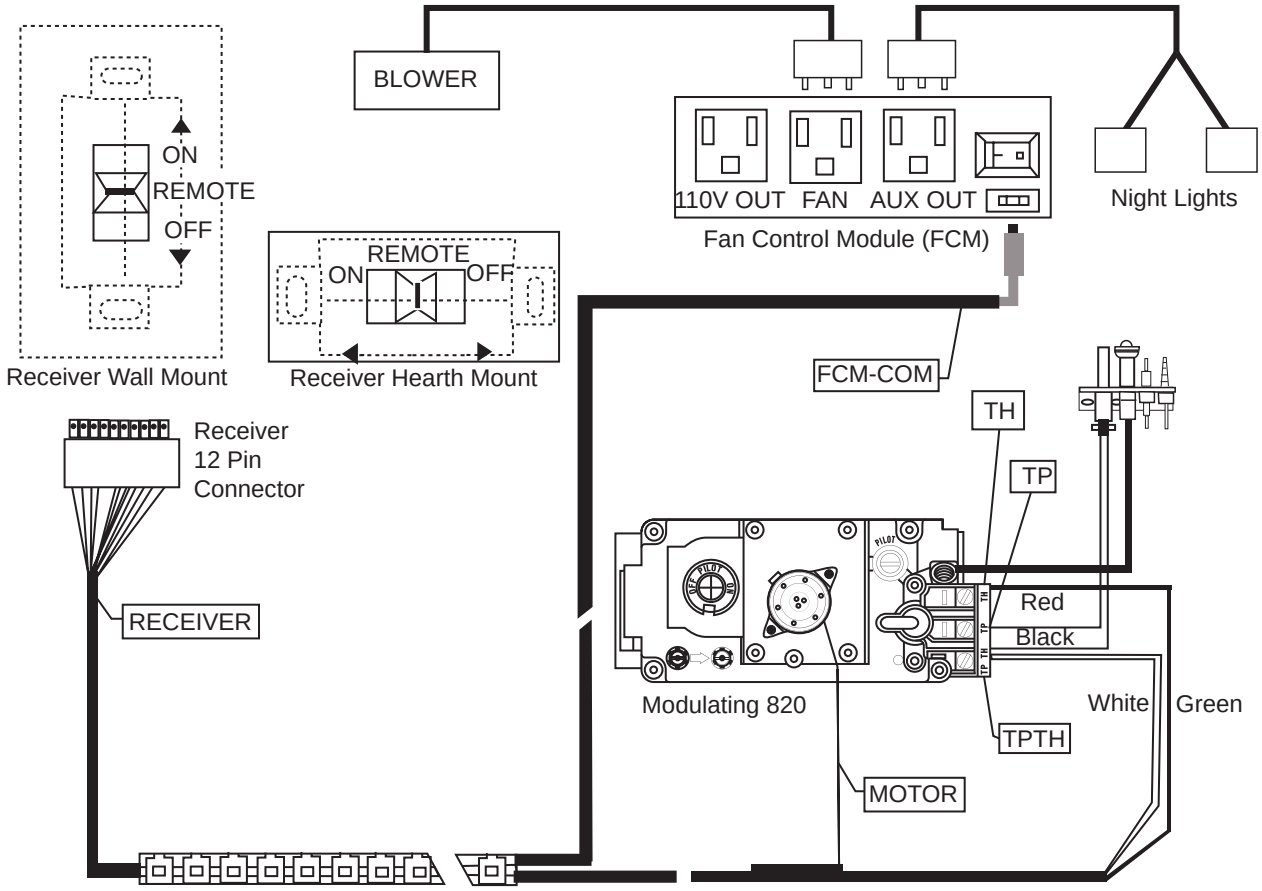

6.1 RECEPTACLE WIRING DIAGRAM

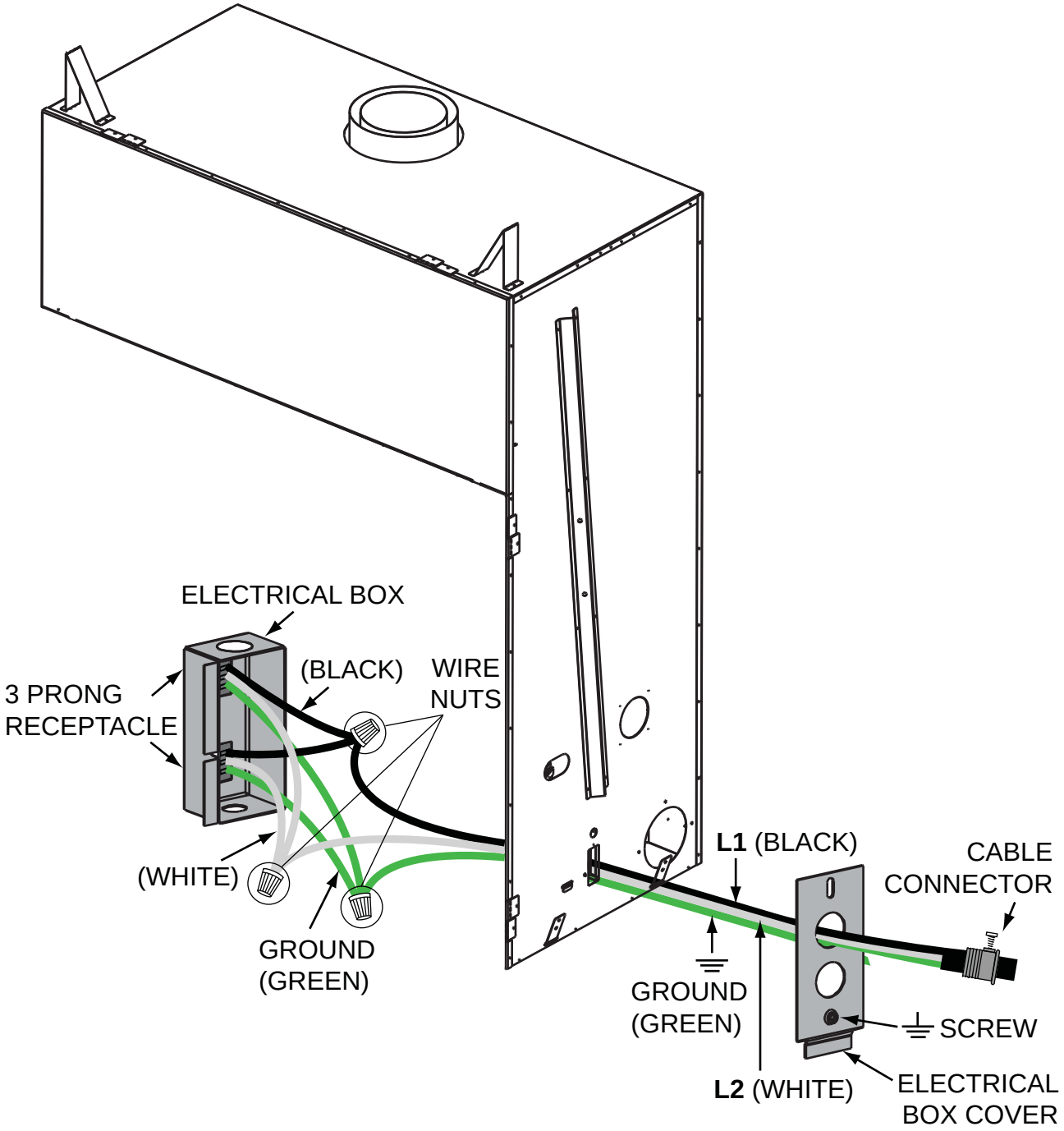

6.2 OPTIONAL BLOWER INSTALLATION

See separate instructions accompanying the blower assembly.

7.0 FINISHING

⚠ WARNING

RISK OF FIRE!

NEVER OBSTRUCT THE FRONT OPENING OF THE APPLIANCE.

THE FRONT OF THE APPLIANCE MUST BE FINISHED WITH ANY NON-COMBUSTIBLE MATERIALS SUCH AS BRICK, MARBLE, GRANITE, ETC., PROVIDED THAT THESE MATERIALS DO NOT GO BELOW THE SPECIFIED DIMENSION AS ILLUSTRATED.

DO NOT STRIKE, SLAM OR SCRATCH GLASS. DO NOT OPERATE APPLIANCE WITH GLASS REMOVED, CRACKED, BROKEN OR SCRATCHED.

FACING AND/OR FINISHING MATERIAL MUST NEVER OVERHANG INTO THE APPLIANCE OPENING.

72.1A

7.1 DOOR REMOVAL

⚠ WARNING

GLASS MAY BE HOT, DO NOT TOUCH GLASS UNTIL COOLED.

THE DOOR LATCHES ARE PART OF A SAFETY SYSTEM AND MUST BE PROPERLY ENGAGED. DO NOT OPERATE THE APPLIANCE WITH LATCHES DISENGAGED.

FACING AND/OR FINISHING MATERIALS MUST NOT INTERFERE WITH AIR FLOW THROUGH AIR OPENINGS, LOUVRES OPENINGS, OPERATION OF LOUVRES OR DOORS OR ACCESS FOR SERVICE. OBSERVE ALL CLEARANCES WHEN APPLYING COMBUSTIBLE MATERIALS.

BEFORE DOOR IS REMOVED TURN THE APPLIANCE OFF AND WAIT UNTIL APPLIANCE IS COOL TO THE TOUCH. DOORS ARE HEAVY AND FRAGILE SO HANDLE WITH CARE.

75.1

Before the glass door can be removed, the control doors must be opened and the hearth strip and screen assembly must be removed.

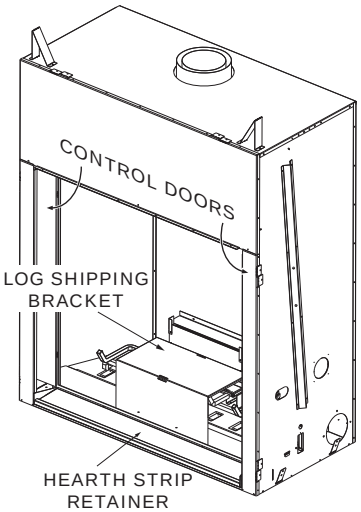

With the control doors pulled open, you can now lift the hearth strip up and away from the front of the appliance. The curtain assembly can be removed by lifting the rod out from the three hooks at the top inside edge of the door opening.

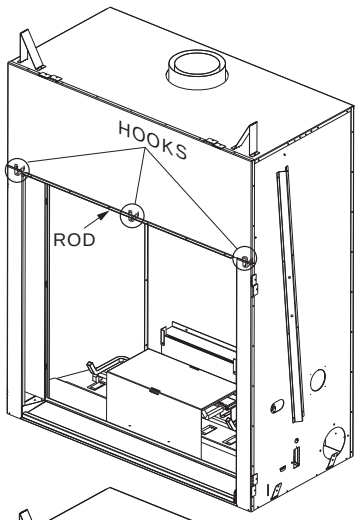

The glass door is secured to the firebox with 10 latches. 3 on each side, and 4 across the top.

A. Pull the handle of the latch forward, then lift the hooks out from the slot in the door frame to release the top and sides of the door.

B. Lift the door out from the retainer along the bottom of the door.

<u>NOTE:</u> We recommend 2 people remove door due to size and weight.

C. Pull the bottom edge of the door out from the appliance until the top will pivot forward. Handle carefully as the door is extremely heavy.

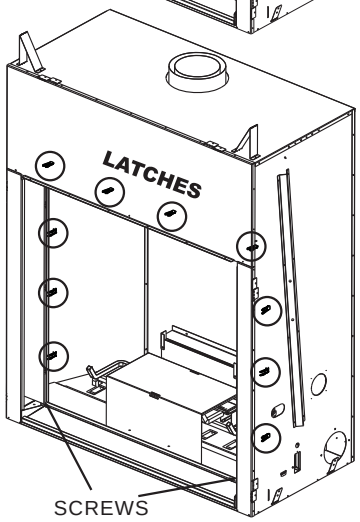

7.2 LOG SHIPPING BRACKET

Before installing the logs, you must first remove the log shipping bracket. Remove the two screws holding the shipping bracket in place. Lift up to remove. Discard once removed. Replace the screws to seal the firebox.

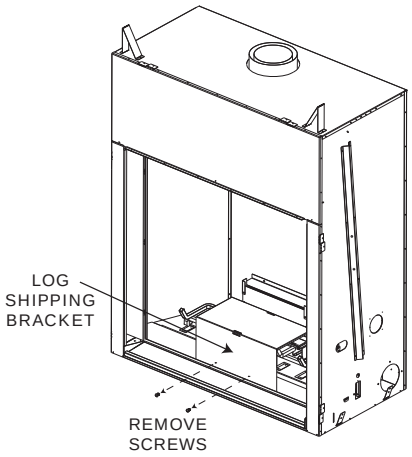

7.3 BRICK PANEL INSTALLATION

Brick panels are shipped separate from appliance due to the brittle material of the bricks, care must be taken not to bend or force them into place.

When shipped, the brick panels range in varying shades of Sandstone. During initial use, the panels will darken temporarily. The appearance of the panels will permanently lighten in color with use.

INSTALL PANELS IN THE FOLLOWING ORDER:

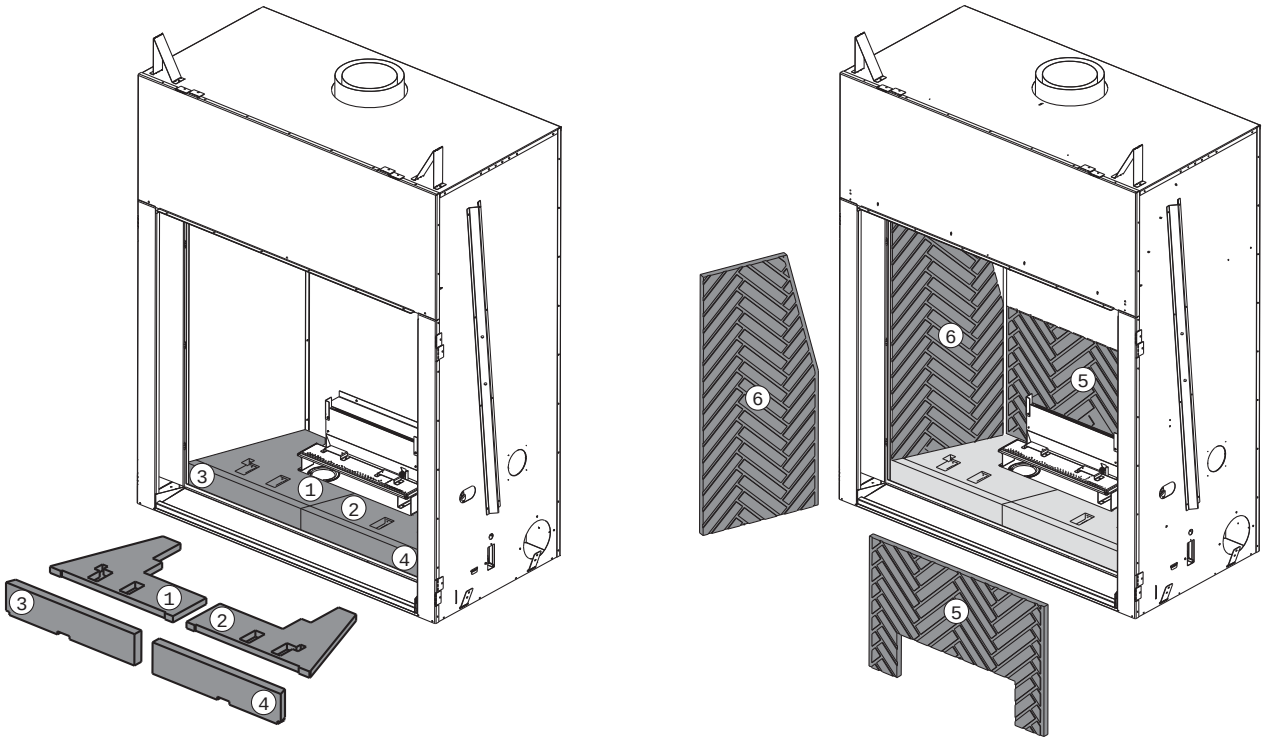

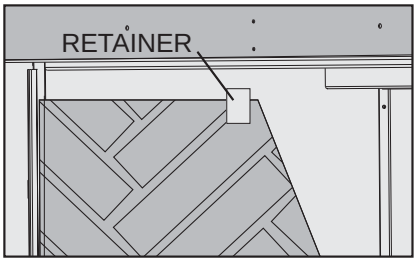

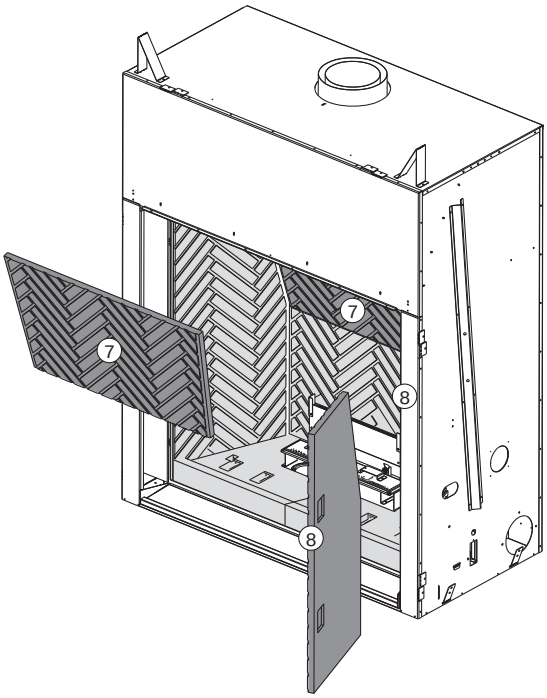

Secure the Left Panel ⑥ and Right Panel ⑧ using the retainers located in the top left and right corners of the firebox.

To install the Front Left ⑨, Centre ⑩, and Right ⑪ Hearth Panels you must first remove one of the Right or Left End Hearth Retainers.

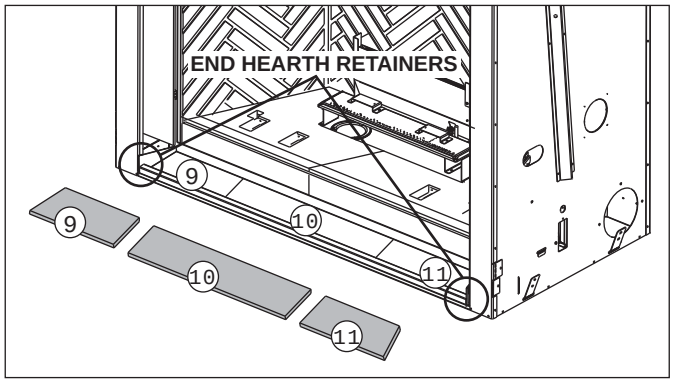

7.4 ANDIRON PLACEMENT

Andirons are packaged separately inside the appliance and must be installed prior to the log installation. Place the Andiron on the Andiron brackets located at the front of the appliance lining up the holes. Secure using the screws provided. Repeat on other side.

7.5 LOG PLACEMENT

⚠ WARNING

FAILURE TO POSITION THE LOGS IN ACCORDANCE WITH THESE DIAGRAMS OR FAILURE TO USE ONLY LOGS SPECIFICALLY APPROVED WITH THIS APPLIANCE MAY RESULT IN PROPERTY DAMAGE OR PERSONAL INJURY.

LOGS MUST BE PLACED IN THEIR EXACT LOCATION IN THE APPLIANCE. DO NOT MODIFY THE PROPER LOG POSITIONS, SINCE APPLIANCE MAY NOT FUNCTION PROPERLY AND DELAYED IGNITION MAY OCCUR.

THE LOGS ARE FRAGILE AND SHOULD BE HANDLED WITH CARE.

76.1A

PHAZER™ logs and glowing embers, exclusive to Wolf Steel Ltd. fireplaces, provide a unique and realistic glowing effect that is different in every installation. Take the time to carefully position the glowing embers for a maximum glowing effect. Log colors may vary. During the initial use of the appliance, the colors will become more uniform as color pigments burn in during the heat activated curing process.

A. Center the rear log (#1) behind the rear burner and onto the log support.

B. Place log#2 and log#3 onto the locating pins. The logs should sit flat on the burner.

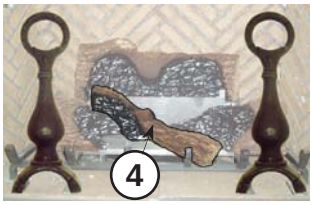

C. Place the locating hole on the underside of log#4 onto the locating pin on top of log#3. The notch at the opposite end of log#4 sits on the third grate post in from the right side.

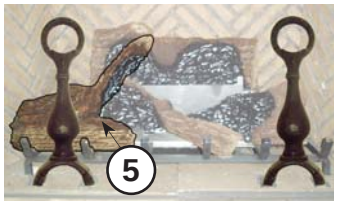

D. Place the small branch of log#5 into the notch on log#3. The notches on the bottom edge of log #5 should sit on the first and second grate posts from the left.

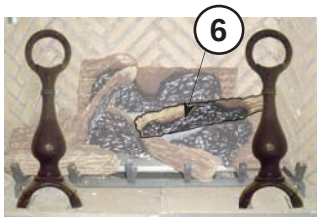

E. Place the small end of log#6 into the front notch of log#4. Place the locating hole in the large end of log#6 onto the locating pin on top of log#2.

F. Place the pin in log #7 in the hole in log #6. The log should sit in the notch on log #2 and the bottom should rest along the right side of the Andiron.

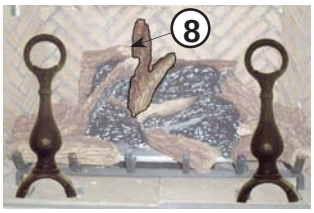

G. Place the large end of log#8 into the rear notch of log#4.
The small branch of log#8 sits in the notch located on top of log#1.

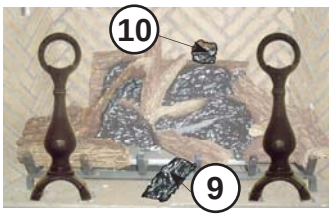

H. Place log#9 onto the grate as though it had burnt off log#5. Place log#10 onto the locating pin on log#1. Again, log#10 should be aligned as though it has burnt off of log#7.

7.6 CHARCOAL EMBERS

Randomly place the charcoal embers along the front and sides of the log support tray in a realistic manner.
Fine dust found in the bottom of the bag should not be used.
NOTE: Charcoal embers are not to be placed on the burner.

32.1

7.7 VERMICULITE

Sprinkle vermiculite around the charcoal embers.
NOTE: Vermiculite is not to be placed on the burner.

33.1

7.8 GLOWING EMBERS

Tear the embers into pieces and place along the front row of ports covering all of the burner area in front of the small logs. Care should be taken to shred the embers into thin, small irregular pieces as only the exposed edges of the fibre hairs will glow. ***The ember material will only glow when exposed to direct flame; however, care should be taken to not block the burner ports.***
Blocked burner ports can cause an incorrect flame pattern, carbon deposits and delayed ignition. ***PHAZER***™ logs glow when exposed to direct flame. Use only certified "glowing embers" and ***PHAZER***™ logs available from your authorized dealer / distributor.

8.0 REMOTE AND VALVE ACCESS

The control area can be accessed either through the control door or through the access panel inside the fire-box. The bulkhead fittings that are part of the gas supply to the burners can be accessed through the bulkhead access plate.

8.1 INNER ACCESS PANEL

Follow the door removal instructions. Remove the right side brick panel. Remove the four screws from the inner access panel.
NOTE: A new gasket will be required, when re-installing the access panel, see "REPLACEMENTS" section.

8.2 BULKHEAD ACCESS PLATE

Follow the door removal instructions. Remove the right side brick panel and hearth pad. Remove the four screws from the bulkhead access panel.
NOTE: A new gasket will be required, when re-installing the bulkhead access panel, see "REPLACEMENTS" section.

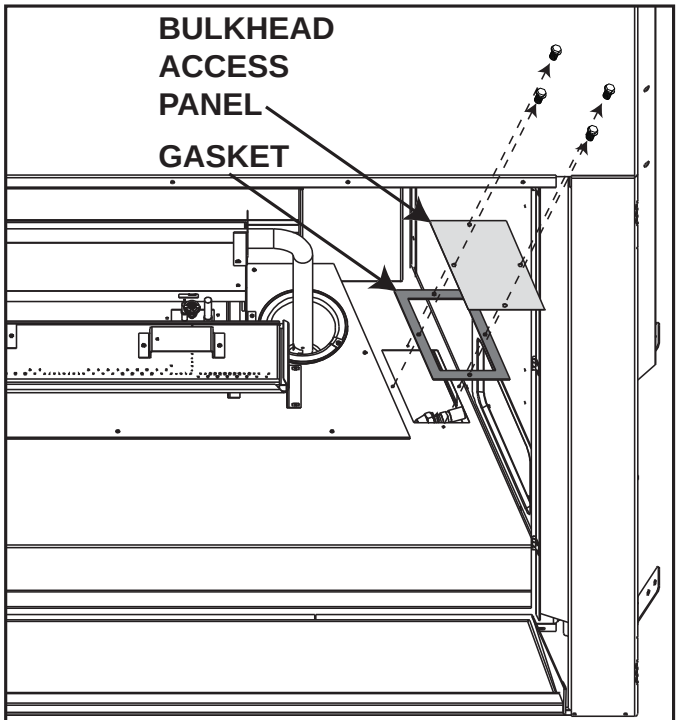

8.3 REMOTE RECEIVER REMOVAL

A. Open the right control door by pulling bottom portion away from magnet catch.

B. Remove the hearth strip by lifting up and away from appliance.

C. Remove the receiver by pulling the left side of the plate away from the bracket.

D. Once disengaged pull the wiring harness out from the back of receiver.

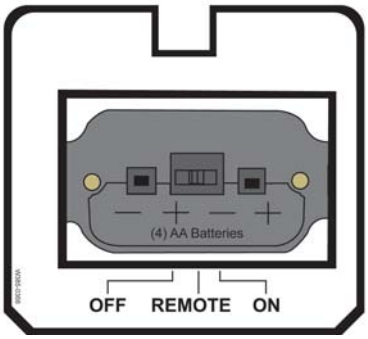

8.4 CONTROL MODULE REMOVAL

A. Remove access panel from inside the firebox.

B. Unplug the control module from the junction box.

C. Pull up on the control module being held down with Velcro and disconnect the plugs (fan, aux). Remove wiring harness from the front of the casing.

D. Install the new control module, see "ELECTRICAL CONNECTION" section.

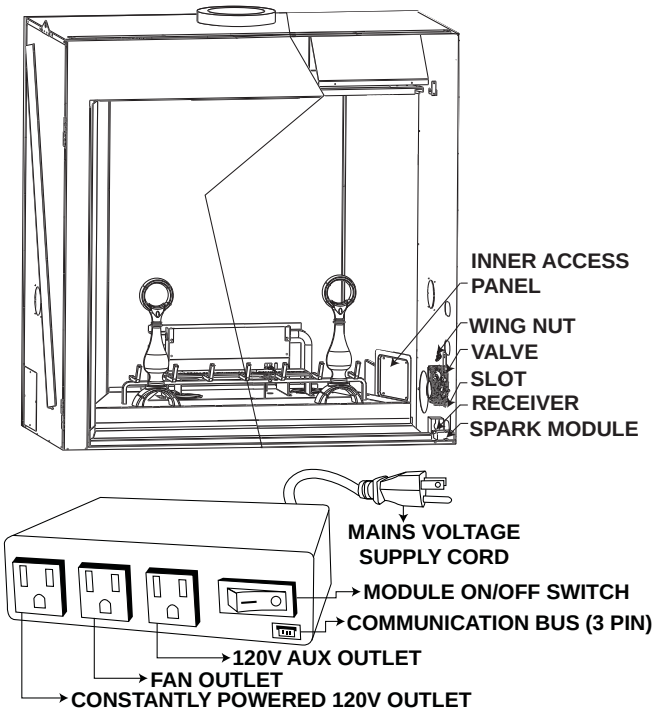

8.5 VALVE REMOVAL

The valve on The *Dream*™ is piped with two flex connectors (one inlet, one outlet). It can be removed or pulled forward for service.

A. Turn gas off.

B. Open right control door.

C. Remove the wing nut and pivot the valve out from the slot at the bottom of the valve.

D. Slowly pull the valve through the control door being careful not to kink the gas lines or wires.

E. Disconnect inlet/outlet flex connectors, wires and thermocouple.

F. Remove screws securing gas valve to the mounting bracket.

8.6 "AUTO SPARK" BATTERY REMOVAL

A. Open the right control door by pulling bottom portion away from magnet catch.

B. Remove the hearth strip by lifting up and away from appliance.

C. The spark module is located in the front right corner of the appliance (see photo below).

D. Disengage the battery compartment door from the top of module.

E. Replace battery and re-install compartment door.

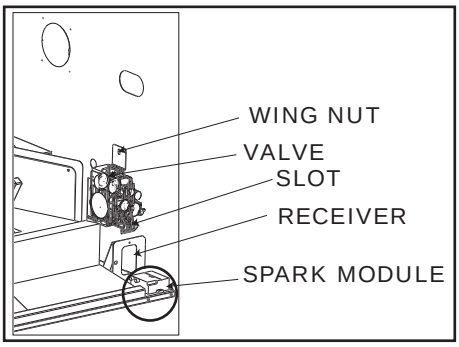

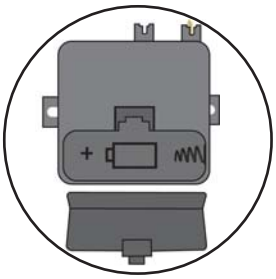

9.0 OPERATION

⚠ WARNING

IF YOU DO NOT FOLLOW THESE INSTRUCTIONS EXACTLY, A FIRE OR EXPLOSION MAY RESULT CAUSING PROPERTY DAMAGE, PERSONAL INJURY OR LOSS OF LIFE.

ALWAYS LIGHT THE PILOT WHETHER FOR THE FIRST TIME OR IF THE GAS SUPPLY HAS RUN OUT WITH THE GLASS DOOR OPENED OR REMOVED.

9.1 GENERAL TRANSMITTER LAYOUT

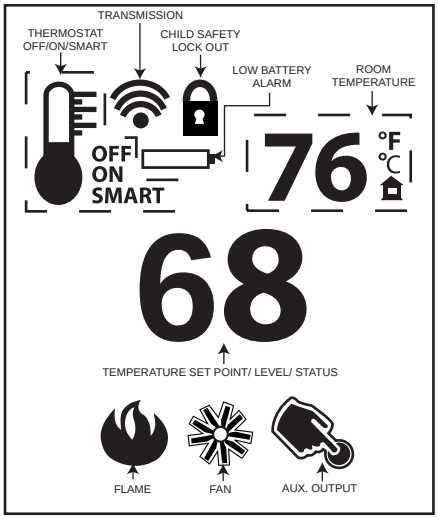

35.1

9.2 APPLIANCE OPERATION

A. Install 4 AA batteries into the receiver battery bay as indicated on the battery cover (+/-). (Only required as back up to household electricity). While there is a provision to connect a 6V battery pack (do not use a 9 volt battery), it must not be used when using the remote control receiver.

B. Place the 3 position slider switch in the “Remote” position.

C. Using the end of a paper clip, or other similar object, insert the end of the paper clip into the hole marked “PRG” on the receiver front cover. The receiver will “beep” three (3) times to indicate that it is ready to synchronize with the transmitter.

D. Install the 3 AAA batteries in the transmitter battery bay, located on the base of the transmitter. With the batteries already installed in the transmitter, push the “ON” button. The receiver will “beep” four times to indicate the transmitter’s command is accepted and set to the particular code of that transmitter. The system is now initialized.

35.2

9.3 HAND HELD REMOTE OPERATIONS

A. Press the ON/OFF key on the transmitter. The transmitter display will show all active icons on the screen. A single “beep” from the receiver will confirm reception of the command.

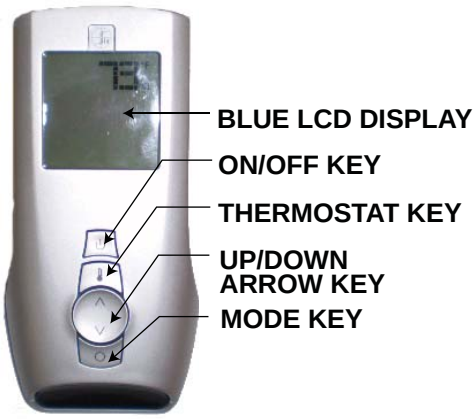

9.4 TEMPERATURE DISPLAY

A. With the system in the “OFF” position, press the Thermostat Key and the Mode Key at the same time to change from degrees F to C.

B. Look at the LCD screen on the Transmitter to verify that a C or F is visible to the right of the Room Temperature display.

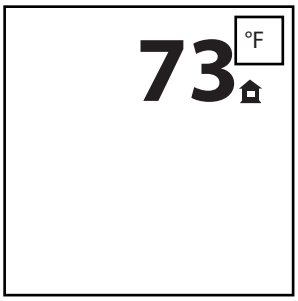

35.5

9.5 ROOM THERMOSTAT

The remote transmitter can operate as a room thermostat.
The thermostat can be set to a desired temperature to control the comfort level in the room.

A. Press the Thermostat Key. The LCD display on the Transmitter will show that the room is “ON” and the set temperature is now displayed.

B. To adjust the set temperature, press the Up/Down Arrow Keys until the desired set temperature is displayed on the LCD screen of the Transmitter.

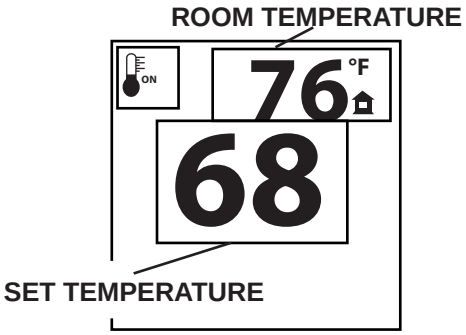

35.6

9.6 SMART THERMOSTAT

The Smart Thermostat function adjusts the flame height according to the difference between the set temperature and the actual room temperatures. As the room temperature gets closer to the set point the Smart Function will automatically adjust the flame down.

A. Press the thermostat key unit the word “SMART” appears to the right of the temperature bulb graphic.

B. To adjust the set temperature, press the Up/Down arrow keys until the desired set temperature is displayed on the LCD screen at the Transmitter.

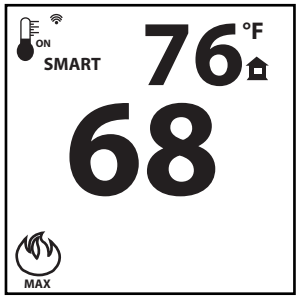

35.7

9.7 FLAME HEIGHT

The remote control has six (6) flame levels. With the system on and the flame level at the maximum, press the Down Arrow Key once and it will reduce the flame height by one step until the flame is turned off.
The Up Arrow Key will increase the flame height each time it is pressed. If the Up Arrow Key is pressed while the system is on but the flame is off, the flame will come on the high position. A single “beep” will confirm reception of the command.

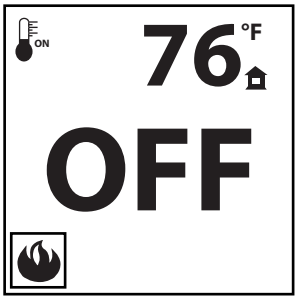

FLAME OFF

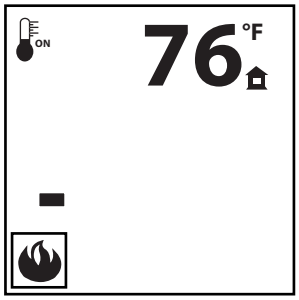

FLAME AT LEVEL 1

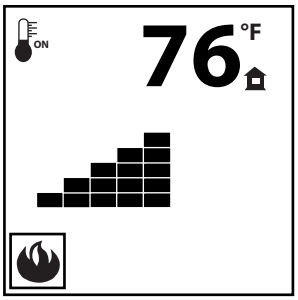

FLAME AT LEVEL 5

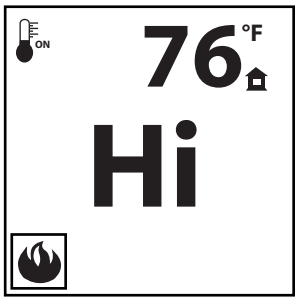

FLAME AT “HI” LEVEL 6

9.8 FAN SPEED

If the appliance is equipped with a hot air circulating fan, the speed of the fan can be controlled by the remote system. The fan speed can be adjusted through six (6) speeds.

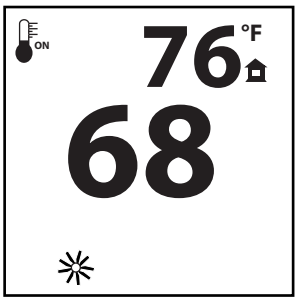

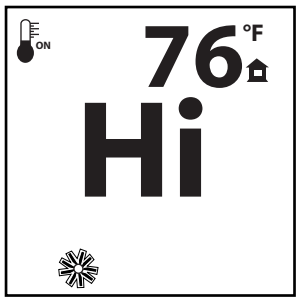

A. Use the Mode key to guide you to the fan control icon.

B. Use the Up/Down Arrow keys to turn ON/OFF or adjust the fan speed. A single “beep” will confirm reception of the command.

35.9

9.9 CHILD PROOF FUNCTION

This function will lock the keys to avoid unsupervised operation.

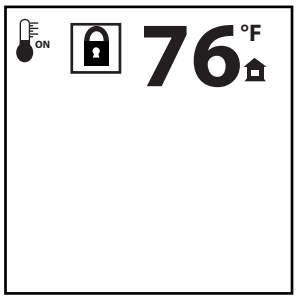

A. Press the MODE and UP keys at the same time.

B. To de-activate this function, press the MODE and UP keys at the same time.

35.10

9.10 NIGHT LIGHTS™

The auxiliary function controls the AUX power outlet on the Control Module which controls the NIGHT LIGHT™.

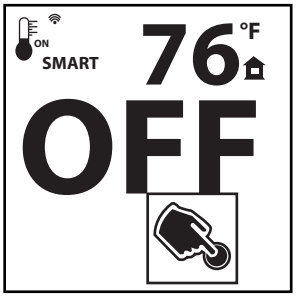

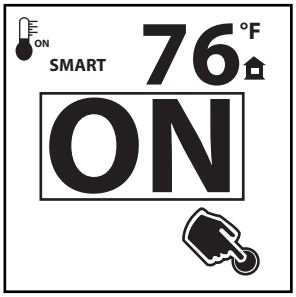

A. Use the Mode Key to guide you to the AUX icon.

B. Pressing the Up Arrow Key will activate the NIGHT LIGHT™.

C. Pressing the Down Arrow Key will turn the NIGHT LIGHT™ off. A single “beep” will confirm the reception of the command.

35.12

9.11 LOW BATTERY / MANUAL BYPASS

The life span of the remote batteries depends on various factors: quality of the batteries, the number of ignitions, the number of charges to the room thermostat set point, etc.

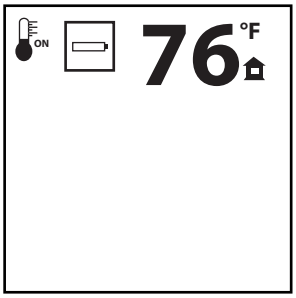

When the transmitter batteries are low, a Battery Icon will appear on the LCD display before all battery power is lost. When the batteries are replaced this icon will disappear.

Not applicable when plugged into 110V.
When the receiver batteries are low, no “beep” will be emitted from the receiver when it receives an ON/OFF command. This in an alert for the receiver that there’s low battery. When the batteries are replaced the “beep” will be emitted from the receiver when the ON/OFF key is pressed.

If the batteries of the receiver or transmitter are low, the appliance can be turned on manually by sliding the three position slider switch on the receiver to the “ON” position. This will bypass the remote control feature and the appliance main burner will come on if the gas valve is in the “ON” position.

35.13

9.12 IN THE EVENT OF A POWER FAILURE

If the receiver is equipped with batteries they will enable flame height control, ON/OFF or thermostat function to control the fireplace during a power failure. Refer to “APPLIANCE OPERATION” section when communications between receiver and transmitter have been lost. The will receiver emit a “beep” sound to confirm programming has been successful once power is restored. During a power failure, if the fireplace was on, the flame height will stay at the setting prior to the failure. If off when the failure occurs and then turned on, the flame height will come on at “HI”. The flame height can then be controlled by the remote.

35.14

9.13 CONTROL MODULE

Control module offers the added ability to control the fan speed through six (6) speeds, a remotely actuated 120V AUX outlet for the NIGHT LIGHT™ and a constantly powered 120V outlet.

<u>NOTE:</u> Control module ON/OFF switch should always be in the “ON” position. If for any reason the module is turned “OFF”, the components plugged into the module won’t have power.

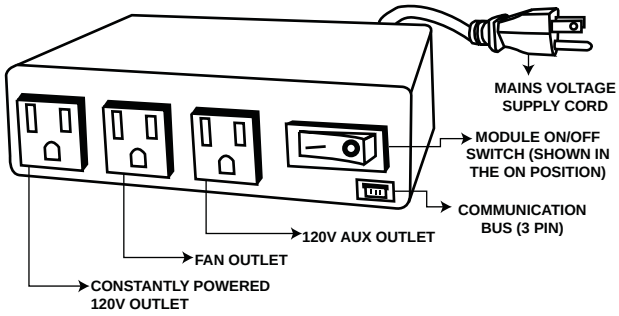

35.15

9.14 TIMED BLOWER

Your remote system may have a built in timer (in thermostat mode) that enables the blower to cycle on and off automatically when the burner turns on and off. With the remote control fan speed preset at the preferred speed, the blower will come on approximately 5 minutes after the main burner comes on and will shut off approximately 12 minutes after the burner shuts off.
This time delay is designed to maximize the blower distribution of heated air.
If at any time the burner re-ignites before the twelve minutes are over, the fan will continue to run.

<u>NOTE:</u> At any time in the sequence, the blower can be manually turned on/off using the remote control.

35.19A

10.0 OPERATING INSTRUCTIONS

⚠ WARNING

IF YOU DO NOT FOLLOW THESE INSTRUCTIONS EXACTLY, A FIRE OR EXPLOSION MAY RESULT CAUSING PROPERTY DAMAGE, PERSONAL INJURY OR LOSS OF LIFE.

ALWAYS LIGHT THE PILOT WHETHER FOR THE FIRST TIME OR IF THE GAS SUPPLY HAS RUN OUT WITH THE GLASS DOOR OPENED OR REMOVED.

Ensure that a continuous gas flow is at the burner before installing the door. When lit for the first time, the fireplace will emit an odor for a few hours. This is a normal temporary condition caused by the "burn-in" of paints and lubricants used in the manufacturing process and will not occur again. After extended periods of non-operation such as following a vacation or a warm weather season, the fireplace may emit a slight odor for a few hours. This is caused by dust particles in the heat exchanger burning off. In both cases, open a window to sufficiently ventilate the room.

FOR YOUR SAFETY READ BEFORE LIGHTING:

A. Do not turn on if children or other at risk individuals are near the fireplace.
B. This fireplace is equipped with a pilot which must be lit by hand while following these instructions exactly.
C. Before operating smell all around the fireplace area for gas and next to the floor because some gas is heavier than air and will settle on the floor.
D. Use only your hand to turn the gas control knob. Never use tools. If the knob will not turn by hand, do not try to repair it. Call a qualified service technician. Force or attempted repair may result in a fire or explosion.
E. Do not use this fireplace if any part has been under water. Immediately call a qualified service technician to inspect the fireplace and replace any part of the control system and any gas control which has been under water.

WHAT TO DO IF YOU SMELL GAS:

- Turn off all gas to the fireplace.
- Open windows.
- Do not try to light any appliance.
- Do not touch any electric switch; do not use any phone in your building.
- Immediately call your gas supplier from a neighbor's phone. Follow the gas supplier's instructions.
- If you cannot reach your gas supplier, call the fire department.

GAS KNOB

LIGHTING INSTRUCTIONS

Do not connect valve or wall switch to electricity. See installation instructions.
When lighting and re-lighting, the gas knob cannot be turned from pilot to off unless the knob is depressed slightly.

1. **STOP!** Read the safety information on the operating label.
2. Turn off all electric power to the fireplace.
3. Turn the gas knob clockwise to off.
4. Wait 5 minutes to clear out any gas. If you smell gas, including near the floor, STOP! Follow “B” on the operating label. If you don’t smell gas, go to the next step.
5. If the fireplace is equipped with a flame adjustment valve, turn clockwise to off.
6. Find pilot located in front of the back log on the right.
7. Turn gas knob clockwise to pilot.
8. This unit is equipped with an auto-spark. Depress and hold gas knob. Keep knob fully depressed for one minute, then release. If pilot does not continue to burn repeat steps 3 through 7.
9. With pilot lit, push and turn gas knob counter-clockwise to on.
10. If equipped with flame adjustment valve, turn knob to high.
11. If equipped with remote on-off switch, main burner may not come on when you turn the valve to on or high. Remote switch must be in the on position to ignite burner.
12. Turn on all electric power to the fireplace.

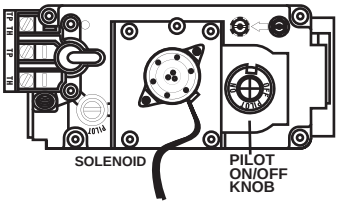

TO TURN OFF GAS

TURN OFF THE GAS AND ELECTRICAL POWER BEFORE SERVICING THE FIREPLACE.

1. Turn off all electric power to the fireplace if service is to be performed.
2. For a complete shut-down procedure: push in gas control knob slightly and turn clockwise to off. Do not force.
3. For a temporary shut-down procedure: set the switch to off. Press and turn the gas knob clockwise to pilot.

Obadiah's · 406-300-1776

11.0 ADJUSTMENTS

11.1 PILOT BURNER ADJUSTMENT

Adjust the pilot screw to provide properly sized flame. Turn in a clockwise direction to reduce the gas flow.

Inlet pressure can be checked by turning screw (A) counter-clockwise until loosened and then placing pressure gauge tubing over the test point. Gauge should read 7” (minimum 4.5”) water column for natural gas or 13” (11” minimum) water column for propane. Check that main burner is operating on “HI”.

Outlet pressure can be checked the same as above using screw (B). Gauge should read 3.5” water column for natural gas or 10” water column for propane. Check that main burner is operating on “HI”.

AFTER TAKING PRESSURE READINGS, TIGHTEN SCREWS FIRMLY TO SEAL. DO NOT OVER TORQUE. LEAK TEST.

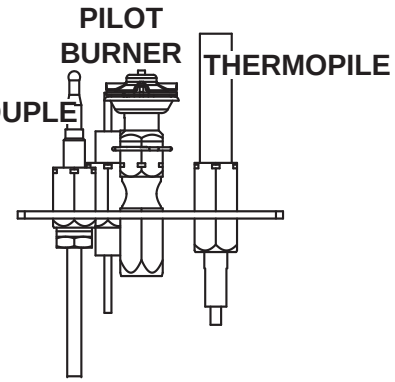

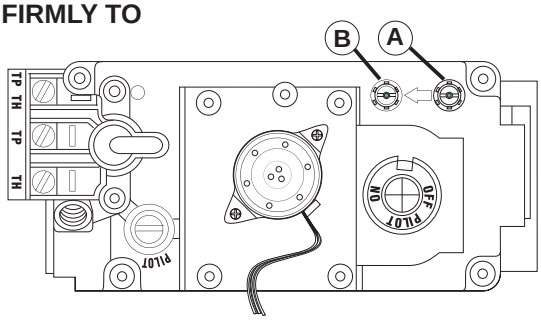

39.2

11.2 VENTURI ADJUSTMENT

This appliance has an air shutter that has been factory set open according to the chart below:

Regardless of venturi orientation, closing the air shutter will cause a more yellow flame, but can lead to carboning. Opening the air shutter will cause a more blue flame, but can cause flame lifting from the burner ports. The flame may not appear yellow immediately; allow 15 to 30 minutes for the final flame colour to be established.

AIR SHUTTER ADJUSTMENT MUST ONLY BE DONE BY A QUALIFIED INSTALLER!

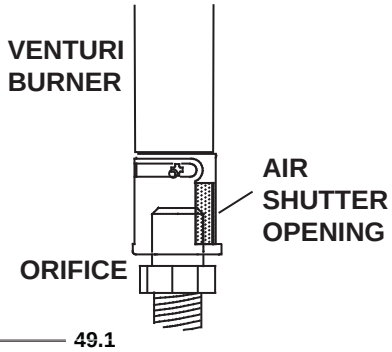

49.1

Air Shutter Openings		
	Front	Rear
LP	3/8”	7/16”
NG	5/32”	3/16”

11.3 FLAME CHARACTERISTICS

It's important to periodically perform a visual check of the pilot and burner flames. Compare them to the illustrations provided. If any flames appear abnormal call a service person.

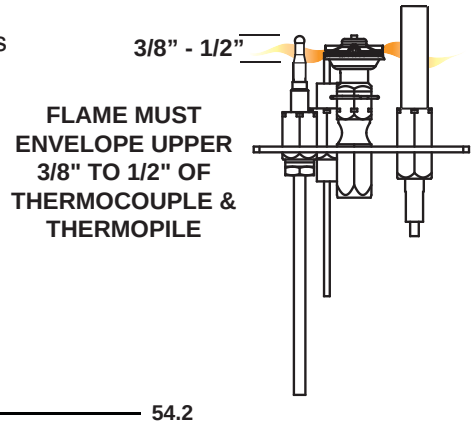

11.4 RESTRICTING VERTICAL VENTS

Vertical terminations may display a very active flame. If this appearance is not desirable, the vent exit must be restricted using restrictor plate, W500-0321. This reduces the velocity of the exhaust gases, slowing down the flame pattern and creating a more traditional appearance.

The plate has a series of holes to allow for adjustment.

Remove the two screws on either side of the exhaust collar inside the firebox. Install the plate in the desired set of holes, then replace the screws. It is recommended to secure in the third set of holes which causes the greatest amount of restriction for vent lengths between 15 and 30 feet.

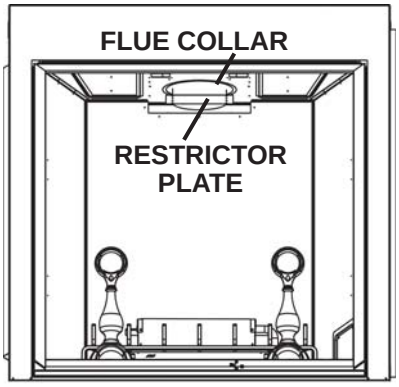

12.0 MAINTENANCE

⚠ WARNING

TURN OFF THE GAS AND ELECTRICAL POWER BEFORE SERVICING THE APPLIANCE.

APPLIANCE MAY BE HOT, DO NOT SERVICE UNTIL APPLIANCE HAS COOLED.

DO NOT USE ABRASIVE CLEANERS.

CAUTION: Label all wires prior to disconnection when servicing controls. Wiring errors can cause improper and dangerous operation. Verify proper operation after servicing. This appliance and its venting system should be inspected before use and at least annually by a qualified service person. The appliance area must be kept clear and free of combustible materials, gasoline or other flammable vapors and liquids. The flow of combustion and ventilation air must not be obstructed.

1. In order to properly clean the burner and pilot assembly, remove the logs, rocks and/or glass to expose both assemblies.
2. Keep the control compartment, media, burner, air shutter opening and the area surrounding the logs clean by vacuuming or brushing, at least once a year.
3. Check to see that all burner ports are burning. Clean out any of the ports which may not be burning or are not burning properly.
4. Check to see that the pilot flame is large enough to engulf the flame sensor and/or thermocouple / thermopile as well as reaches the burner.
5. Replace the cleaned logs, rocks or glass. Failure to properly position the media may cause carboning which can be distributed in the surrounding living area.
6. Check to see that the main burner ignites completely on all openings when turned on. A 5 to 10 second total light-up period is satisfactory. If ignition takes longer, consult your local authorized dealer / distributor.
7. Check that the gasketing on the sides, top and bottom of the door is not broken or missing. Replace if necessary.
8. If for any reason the vent air intake system is disassembled, re-install and re-seal per the instructions provided for the initial installation.

40.1

12.1 CARE OF GLASS

DO NOT CLEAN GLASS WHEN HOT! DO NOT USE ABRASIVE CLEANERS TO CLEAN GLASS.

Buff lightly with a clean dry soft cloth. Clean both sides of the glass after the first 10 hours of operation with a recommended fireplace glass cleaner. Thereafter clean as required. If the glass is not kept clean permanent discoloration and / or blemishes may result.

⚠ WARNING

HOT GLASS WILL CAUSE BURNS.

DO NOT TOUCH GLASS UNTIL COOLED.

NEVER ALLOW CHILDREN TO TOUCH GLASS.

5.1

12.2 GLASS / DOOR REPLACEMENT

⚠ WARNING

DO NOT USE SUBSTITUTE MATERIALS.

GLASS MAY BE HOT, DO NOT TOUCH GLASS UNTIL COOLED.

CARE MUST BE TAKEN WHEN REMOVING AND DISPOSING OF ANY BROKEN DOOR GLASS OR DAMAGED COMPONENTS. BE SURE TO VACUUM UP ANY BROKEN GLASS FROM INSIDE THE APPLIANCE BEFORE OPERATION.

DO NOT STRIKE, SLAM OR SCRATCH GLASS. DO NOT OPERATE APPLIANCE WITH GLASS REMOVED, CRACKED, BROKEN OR SCRATCHED.

A. Place the door frame face down careful not to scratch the paint.

B. Center the gasketed glass inside the door frame with the thick side of the gasket facing up.

C. Bend the glass retainers located along the edge of the door frame over the gasket holding the glass in place. Careful not to break the glass.

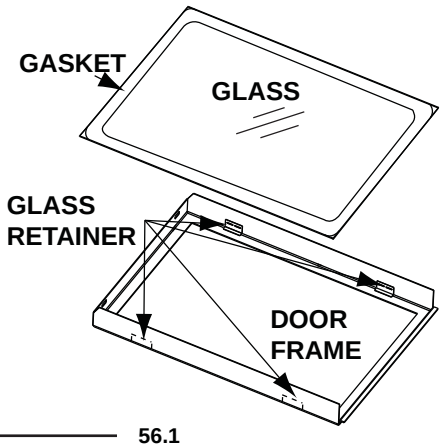

56.1

12.3 NIGHT LIGHT™ REPLACEMENT

Your *Dream*™ comes equipped with 2 "Night Lights™". The lights have been pre-wired and is controlled from the remote control.
If in the event the lamps or lens need replacing, follow these instructions.

Shut off breaker at main power supply.

Remove the four screws that secure the lens frame to the Firebox top. This frame retains the glass lens. The lamp can now be accessed.
<u>NOTE:</u> Do not handle the lamp (bulb) with bare fingers, protect with a clean dry cloth.

The lamp will pull straight out of the socket. Replace with Wolf Steel parts only, as lamp and lens are special "high temperature" products.

When re-installing, ensure integrity of gasket seal.

THE FIREBOX MUST BE SEALED.
Over tightening the screws could break the lens.
"Light Leakage" from the holes in the housing lamp may be observed. The holes in the lamp housing are necessary for ventilation and must not be covered.

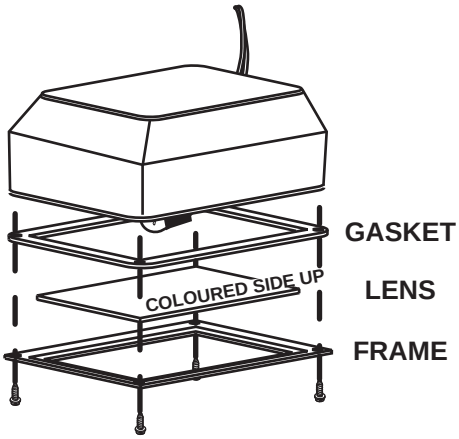

13.0 REPLACEMENTS

⚠ WARNING

FAILURE TO POSITION THE PARTS IN ACCORDANCE WITH THIS MANUAL OR FAILURE TO USE ONLY PARTS SPECIFICALLY APPROVED WITH THIS APPLIANCE MAY RESULT IN PROPERTY DAMAGE OR PERSONAL INJURY.

**** THIS IS A FAST ACTING THERMOCOUPLE. IT IS AN INTEGRAL SAFETY COMPONENT. REPLACE ONLY WITH A FAST ACTING THERMOCOUPLE SUPPLIED BY WOLF STEEL LTD.**

Contact your dealer or the factory for questions concerning prices and policies on replacement parts. Normally all parts can be ordered through your Authorized dealer / distributor.

FOR WARRANTY REPLACEMENT PARTS, A PHOTOCOPY OF THE ORIGINAL INVOICE WILL BE REQUIRED TO HONOUR THE CLAIM.

When ordering replacement parts always give the following information:

- Model & Serial Number of appliance
- Installation date of appliance
- Part number
- Description of part
- Finish

*** IDENTIFIES ITEMS WHICH ARE NOT ILLUSTRATED. FOR FURTHER INFORMATION, CONTACT YOUR AUTHORIZED DEALER.**

41.2

COMPONENTS		
REF NO.	**PART NO.**	**DESCRIPTION**
1*	W390-0002	DOOR LATCH (EA)
2	W725-0047	NATURAL GAS VALVE - MODULATING
2	W725-0048	PROPANE GAS VALVE - MODULATING
3	W456-0042	#42 NATURAL GAS ORIFICE
3	W456-0037	#37 NATURAL GAS ORIFICE
3	W456-0053	#53 PROPANE GAS ORIFICE
3	W456-0054	#54 PROPANE GAS ORIFICE
4	W680-0014	THERMOCOUPLE
5	W240-0008	ELECTRODE C/W LEAD
6	W680-0015	THERMOPILE
7	W010-1478	NATURAL GAS PILOT ASSEMBLY
7	W010-1479	PROPANE GAS PILOT ASSEMBLY
8	W455-0070	NG PILOT INJECTOR
8	W455-0068	LP PILOT INJECTOR
9*	W385-0334	NAPOLEON® LOGO
10*	W290-0116	DOOR GASKET
11	W010-1797	FIRESTOP ASSEMBLY
12	W660-0041	SPARK SWITCH
13	W660-0086	SWITCH, FAN CONTROL
14	W660-0071	REMOTE TRANSMITTER
15	W660-0075	SWITCH, PROFLAME S-RECEIVER
16	W190-0017	DC SPARK UNIT CONTROL
17	W010-2163	DOOR FRAME
18*	W010-1516	GLASS C/W GASKET
19	W565-0089	SCREEN
20*	W120-0054	CURTAIN ROD CAP
21	W010-0978	PAN BURNER
22	W100-0078	TUBE BURNER

NOTE: Care must be taken when removing and disposing of any broken glass or damaged components. Be sure to vacuum up any broken glass from inside the appliance before operation.

COMPONENTS

REF NO.	PART NO.	DESCRIPTION
23*	W010-2164	CONTROL DOOR ASSEMBLY
24*	W290-0154	BULKHEAD ACCESS GASKET
25*	W290-0153	BURNER GASKET
26	GL-659	LOG SET
27*	W361-0016	GLOWING EMBERS
28*	W550-0001	CHARCOAL EMBERS
29	W135-0316	REAR LOG #1
30	W135-0307	RIGHT MIDDLE LOG #2
31	W135-0308	LEFT MIDDLE LOG #3
32	W135-0311	FRONT CROSSOVER LOG #4
33	W135-0318	LEFT FRONT LOG #5
34	W135-0312	MIDDLE CROSSOVER LOG #6
35	W135-0317	RIGHT FRONT LOG #7
36	W135-0313	REAR CROSSOVER LOG #8
37	W135-0314	FRONT CHUNK #9
38	W135-0315	REAR CHUNK #10
39*	W720-0098	PILOT TUBE
40*	W361-0014	VERMICULITE
41*	W300-0067	ACCENT LIGHT GLASS
42*	W387-0006	ACCENT LIGHT
43*	W707-0006	TRANSFORMER, 12 VAC 2.0 AMP
44	W290-0080	ACCENT LENS GASKET
45*	W475-0499	PANEL REAR FIBRE
46*	W475-0493	PANEL, RIGHT FIBRE
47*	W475-0494	PANEL, LEFT FIBRE
48*	W475-0492	PANEL, BAFFLE
49*	W475-0496	HEARTH, LEFT FIBRE
50*	W475-0495	HEARTH, RIGHT FIBRE
51*	W475-0497	HEARTH, RIGHT MIDDLE
52*	W475-0498	HEARTH, LEFT MIDDLE
53*	W333-0011	HEARTH, FRONT CENTRE CONCRETE
54*	W333-0010	HEARTH, FRONT LEFT CONCRETE
55*	W333-0012	HEARTH, FRONT RIGHT CONCRETE
56*	W750-0221	WIRE HARNESS, GTMF
57	W135-0305	ANDIRON

FLEXIBLE VENT KITS

REF NO.	PART NO.	DESCRIPTION
	GD620 (5 FT)	
58*	W010-0772	8” FLEXIBLE ALUMINUM LINER - 5 FT C/W SPACERS
59*	W730-0026	10” FLEXIBLE ALUMINUM LINER - 5 FT
	GD630 (10 FT)	
60*	W730-0027	10” FLEXIBLE ALUMINUM LINER - 10 FT
61*	W010-0773	8” FLEXIBLE ALUMINUM LINER - 10 FT C/W SPACERS
62*	W010-0810	WALL SUPPORT ASSEMBLY

HORIZONTAL TERMINAL KIT

REF NO.	PART NO.	DESCRIPTION
63	GD622R	WALL TERMINAL KIT

ROOF TERMINAL KITS		
REF NO.	**PART NO.**	**DESCRIPTION**
64	GD610	1/12 TO 7/12 PITCH
65	GD611	8/12 TO 12/12 PITCH
66	GD612	FLAT ROOF
67	W490-0075	8/10 INNER OUTER SLEEVE
68	W670-0008	8/10 TERMINAL
69	W170-0016	STORM COLLAR
70	W010-1798	ROOF SUPPORT
71	W263-0083	ROOF FLASHING 1/12-7/12 PITCH
	W263-0084	ROOF FLASHING 8/12-12/12 PITCH

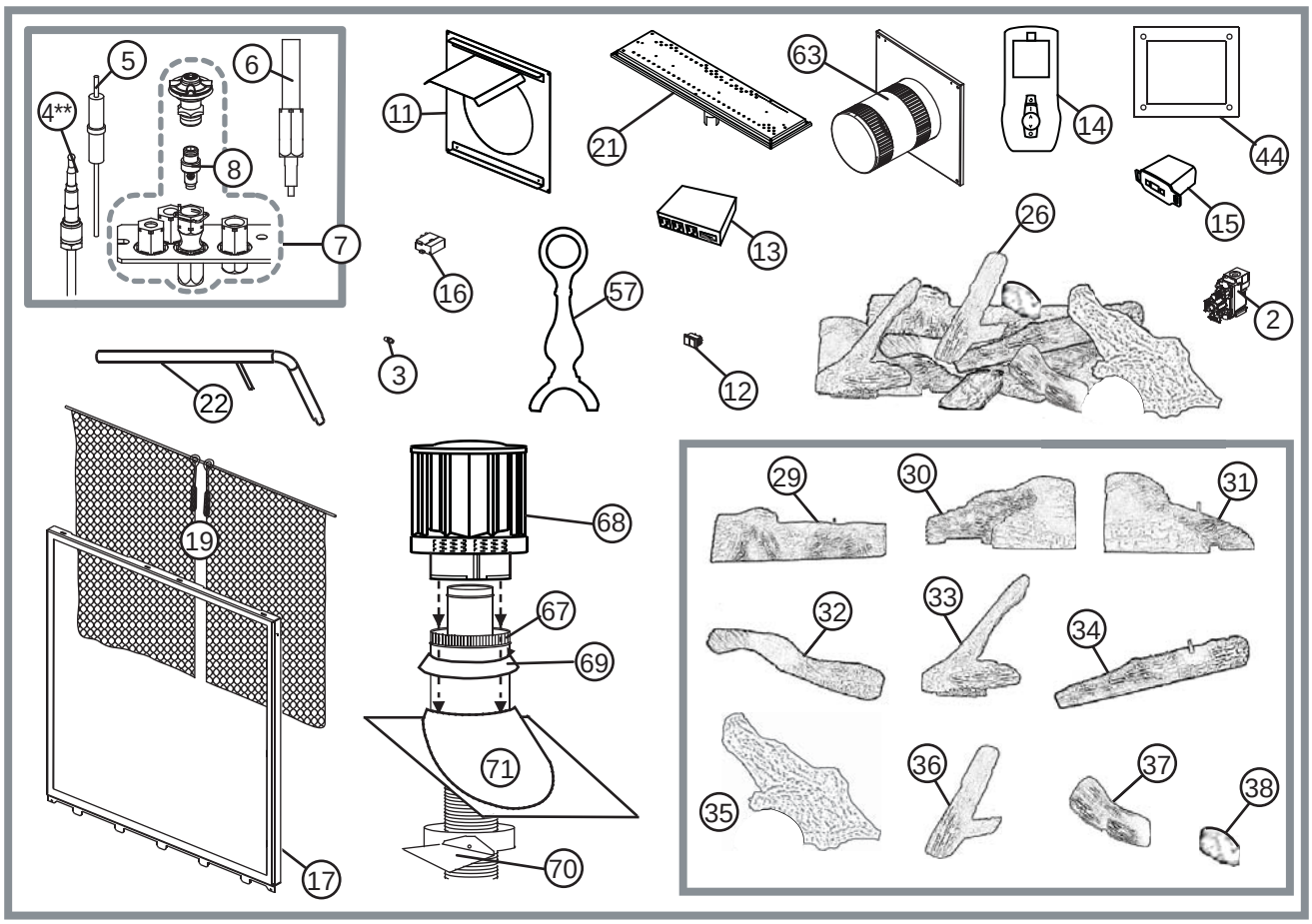

ACCESSORIES		
REF NO.	**PART NO.**	**DESCRIPTION**
1*	W573-0007	HI-TEMP SEALANT
2	GD501	HEAT GUARD
3	GA-566	HOT AIR DISTRIBUTION KIT
4	GA-72	HOT AIR EXHAUST KIT
5	GA-70	EXTENSION KIT, 5FT FLEX VENT
6*	W010-0370	WALL SUPPORT ASSEMBLY
7*	W175-0249	10” COUPLER
8*	W175-0002	8” COUPLER
9*	W175-0260	CONVERSION KIT - NG TO LP
9*	W175-0261	CONVERSION KIT - LP TO NG
10	CP90	CRANE AND POT
11*	F90SA	DECORATIVE FRAME-SQUARE “ARTSAN”
12*	DK90RA	RECTANGULAR DOUBLE DOORS “ARTISAN”
13	W585-0222	VENT PIPE SHIELD
14	W170-0116	10” STORM COLLAR
15*	NZ64	BLOWER KIT
16*	GA65	10’ FLEX WITH 6” COLLAR (FOR USE WITH NZ64)

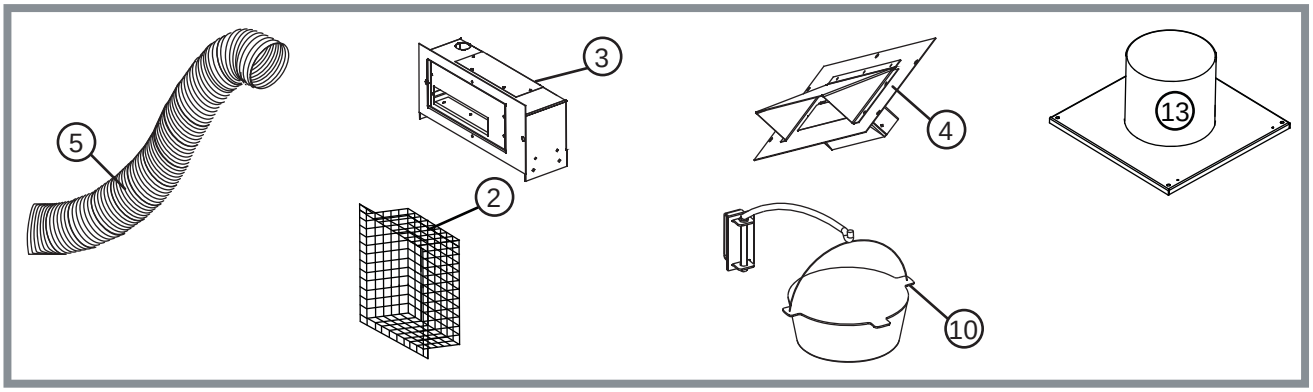

14.0 TROUBLE SHOOTING

⚠ WARNING

ALWAYS LIGHT THE PILOT WHETHER FOR THE FIRST TIME OR IF THE GAS SUPPLY HAS RAN OUT, WITH THE GLASS DOOR OPEN OR REMOVED.

TURN OFF THE GAS AND ELECTRICAL POWER BEFORE SERVICING THE APPLIANCE.

APPLIANCE MAY BE HOT, DO NOT SERVICE UNTIL APPLIANCE HAS COOLED.

DO NOT USE ABRASIVE CLEANERS.

SYMPTOM	PROBLEM		TEST SOLUTION
Main burner flame is a blue, lazy, transparent flame.	Blockage in vent.	-	Remove blockage. In really cold conditions, ice buildup may occur on the terminal and should be removed as required. To minimize this from happening again, it is recommended that the vent lengths that pass through unheated spaces (attics, garages, crawl spaces) be wrapped with an insulated mylar sleeve. Prevent sleeve from sagging. Contact your local authorized dealer for more information.
	Incorrect installation.	-	Refer to “VENTING” section to ensure correct location of storm collars.
Flames are consistently too large or too small. Carboning occurs.	Unit is over-fired or underfired.	-	**Check pressure readings:** *Inlet pressure* can be checked by turning screw (A) counter-clockwise 2 or 3 turns and then placing pressure gauge tubing over the test point. Gauge should read 7” (minimum 4.5”) water column for natural gas or 13” (minimum 11”) water column for propane. Check that main burner is operating on ‘HI’. *Outlet pressure* can be checked the same as above using screw (B). Gauge should read 3.5” water column for natural gas or 10” water column for propane. Check that main burner is operating on ‘HI’. **AFTER TAKING PRESSURE READINGS, BE SURE TO TURN SCREWS CLOCKWISE FIRMLY TO RESEAL. DO NOT OVER TORQUE.** Leak test with a soap and water solution.
Carbon is being deposited on glass, burner media or combustion chamber surfaces.	Air shutter has become blocked.	-	Ensure air shutter opening is free of lint or other obstructions.
	Flame is impinging on the burner media or combustion chamber.	-	Check that the burner media is correctly positioned.
		-	Open air shutter to increase the primary air.
		-	Check the input rate: check the manifold pressure and orifice size as specified by the rating plate values.
		-	Check that the door gasketing is not broken or missing and that the seal is tight.
		-	Check that both vent liners are free of holes and well sealed at all joints.
		-	Check that minimum rise per foot has been adhered to for any horizontal venting.
White / grey film forms.	Sulphur from fuel is being deposited on glass, burner media or combustion chamber surfaces.	-	Clean the glass with a recommended gas fireplace glass cleaner. DO NOT CLEAN GLASS WHEN HOT.
		-	If deposits are not cleaned off regularly, the glass may become permanently marked.
Exhaust fumes smelled in room, headaches.	Fireplace is spilling.	-	Ensure exhaust bracket gasket seal.
		-	Check door seal.
		-	Check for exhaust blockage.
		-	Check that venting is installed correctly.
		-	Room is in negative pressure; increase fresh air supply.

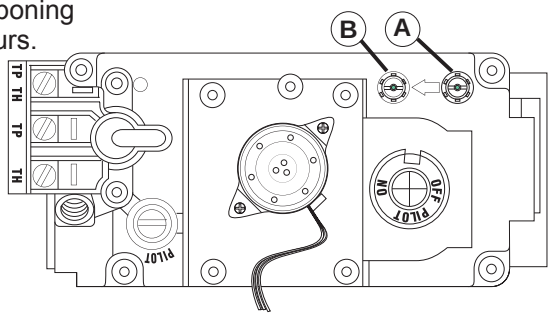

Obadiah's · 406-300-1776

SYMPTOM	PROBLEM	TEST SOLUTION
Main burner goes out; pilot stays on.	Pilot flame is not large enough or not engulfing the thermopile.	- Turn up the pilot flame. - Replace pilot assembly.
	Thermopile shorting.	- Clean thermopile connection to the valve. Reconnect. - Replace thermopile / valve.
	Remote wall switch wire is too long; too much resistance in the system.	- Shorten wire to connect length or wire gauge.
	Faulty thermostat or switch.	- Replace.
Main burner goes out; pilot goes out.	Refer to “MAIN BURNER GOES OUT; PILOT STAYS ON”	
	Vent is blocked	- Check for vent blockage.
	Vent is re-circulating	- Check joint seals and installation
	Flexible vent has become disconnected from fireplace.	- Re-attach to fireplace. - Cap was not replaced.
Pilot goes out when the gas knob is released. **The gas valve has an interlock device which will not allow the pilot burner to be lit until the thermocouple has cooled. Allow approximately 60 seconds for the thermocouple to cool.**	System is not correctly purged.	- Purge the gas line.
	Out of propane gas.	- Fill the tank.
	Pilot flame is not large enough.	- Turn up the pilot flame.
	Pilot flame is not engulfing the thermocouple	- Gently twist the pilot head to improve the flame pattern around the thermocouple.
	Thermocouple shorting / faulty.	- Loosen and tighten thermocouple. - Clean thermocouple and valve connection. - Replace thermocouple. - Replace valve.
	Faulty valve.	- Replace.
Pilot burning; no gas to main burner; gas knob is on ‘HI’; wall switch / thermostat is on.	Thermostat or switch is defective	- Connect a jumper wire across the wall switch terminals; if main burner lights, replace switch / thermostat.
	Wall switch wiring is defective.	- Disconnect the switch wires & connect a jumper wire across terminals 1 & 3; if the main burner lights, check the wires for defects and / or replace wires.
	Main burner orifice is plugged.	- Remove stoppage in orifice.
	Faulty valve.	- Replace.
Pilot will not light.	No spark at pilot burner.	- Check if pilot can be lit by a match. - Check that the wire is connected to the push button igniter. - Check if the push button igniter needs tightening. - Replace the wire if the wire insulation is broken or frayed. - Replace the electrode if the ceramic insulator is cracked or broken. - Replace the push button ignitor
	Out of propane gas.	- Fill the tank.
	Spark gap is incorrect.	- Spark gap should be 0.150” to 0.175” (5/32” to 11/64” approx.) from the electrode tip and the pilot burner. To ensure proper electrode location, tighten securing nut (finger tight plus 1/4 turn).
	No gas at the pilot burner.	- Check that the manual valve is turned on. - Check the pilot orifice for blockage. - Replace the valve. - Call the gas distributor.

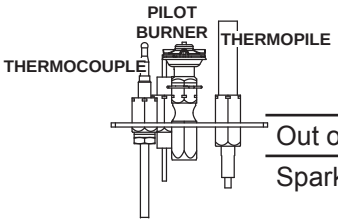

Obadiah's · 406-300-1776

SYMPTOM	PROBLEM	TEST SOLUTION
Pilot goes out while standing: Main burner is in “OFF” position.	Gas piping is undersized.	- Turn on all gas appliances and see if pilot flame flutters, diminishes or extinguishes, especially when main burner ignites. Monitor appliance supply working pressure. - Check if supply piping size is to code. Correct all undersized piping.
Remote wall switch is in “OFF” position; main burner comes on when gas knob is turned to “ON” position.	Wall switch is mounted upside down.	- Reverse.
	Remote wall switch is grounding.	- Replace.
	Remote wall switch wire is grounding.	- Check for ground (short); repair ground or replace wire.
	Faulty valve.	- Replace.

42.2_3

15.0 WARRANTY

NAPOLEON® products are manufactured under the strict Standard of the world recognized ISO 9001 : 2008 Quality Assurance Certificate.

NAPOLEON® products are designed with superior components and materials assembled by trained craftsmen who take great pride in their work. The burner and valve assembly are leak and test-fired at a quality test station. The complete appliance is again thoroughly inspected by a qualified technician before packaging to ensure that you, the customer, receives the quality product that you expect from NAPOLEON®.

NAPOLEON® GAS APPLIANCE PRESIDENT'S LIFETIME LIMITED WARRANTY

The following materials and workmanship in your new NAPOLEON® gas appliance are warranted against defects for as long as you own the appliance. This covers: combustion chamber, heat exchanger, stainless steel burner, phazer™ logs and embers, rocks, ceramic glass (thermal breakage only), gold plated parts against tarnishing, porcelainized enameled components and aluminum extrusion trims.*

Electrical (110V and millivolt) components and wearable parts such as blowers, gas valves, thermal switch, switches, wiring, remote controls, ignitor, gasketing, and pilot assembly are covered and NAPOLEON® will provide replacement parts free of charge during the first year of the limited warranty.*

Labour related to warranty repair is covered free of charge during the first year. Repair work, however, requires the prior approval of an authorized company official. Labour costs to the account of NAPOLEON® are based on a predetermined rate schedule and any repair work must be done through an authorized NAPOLEON® dealer.

* Construction of models vary. Warranty applies only to components included with your specific appliance.

CONDITIONS AND LIMITATIONS

NAPOLEON® warrants its products against manufacturing defects to the original purchaser only. Registering your warranty is not necessary. Simply provide your proof of purchase along with the model and serial number to make a warranty claim. NAPOLEON® reserves the right to have its representative inspect any product or part thereof prior to honouring any warranty claim. Provided that the purchase was made through an authorized NAPOLEON® dealer your appliance is subject to the following conditions and limitations:

Warranty coverage begins on the date of original installation.

This factory warranty is non-transferable and may not be extended whatsoever by any of our representatives.

The gas appliance must be installed by a licensed, authorized service technician or contractor. Installation must be done in accordance with the installation instructions included with the product and all local and national building and fire codes.

This limited warranty does not cover damages caused by misuse, lack of maintenance, accident, alterations, abuse or neglect and parts installed from other manufacturers will nullify this warranty.

This limited warranty further does not cover any scratches, dents, corrosion or discoloring caused by excessive heat, abrasive and chemical cleaners nor chipping on porcelain enamel parts, mechanical breakage of PHAZER™ logs and embers.

This warranty extends to the repair or replacement of warranted parts which are defective in material or workmanship provided that the product has been operated in accordance with the operation instructions and under normal conditions.

After the first year, with respect to this President's Lifetime Limited Warranty, NAPOLEON® may, at its discretion, fully discharge all obligations with respect to this warranty by refunding to the original warranted purchaser the wholesale price of any warranted but defective part(s).

NAPOLEON® will not be responsible for installation, labour or any other expenses related to the reinstallation of a warranted part and such expenses are not covered by this warranty.

Notwithstanding any provisions contained in the President's Lifetime Limited Warranty, NAPOLEON'S responsibility under this warranty is defined as above and it shall not in any event extend to any incidental, consequential or indirect damages.

This warranty defines the obligations and liability of NAPOLEON® with respect to the NAPOLEON® gas appliance and any other warranties expressed or implied with respect to this product, its components or accessories are excluded.

NAPOLEON® neither assumes, nor authorizes any third party to assume, on its behalf, any other liabilities with respect to the sale of this product.

NAPOLEON® will not be responsible for: over-firing, downdrafts, spillage caused by environmental conditions such as rooftops, buildings, nearby trees, hills, mountains, inadequate vents or ventilation, excessive venting configurations, insufficient makeup air, or negative air pressures which may or may not be caused by mechanical systems such as exhaust fans, furnaces, clothes dryers, etc.

Any damages to the appliance, combustion chamber, heat exchanger, plated trim or other components due to water, weather damage, long periods of dampness, condensation, damaging chemicals or cleaners will not be the responsibility of NAPOLEON®.

All parts replaced under the President's Limited Lifetime Warranty Policy are subject to a single claim.

During the first 10 years NAPOLEON® will replace or repair the defective parts covered by the lifetime warranty at our discretion free of charge. From 10 years to life, NAPOLEON® will provide replacement parts at 50% of the current retail price.

All parts replaced under the warranty will be covered for a period of 90 days from the date of their installation.

The manufacturer may require that defective parts or products be returned or that digital pictures be provided to support the claim. Returned products are to be shipped prepaid to the manufacturer for investigation. If a product is found to be defective, the manufacturer will repair or replace such defect.

Before shipping your appliance or defective components, your dealer must obtain an authorization number. Any merchandise shipped without authorization will be refused and returned to sender.

Shipping costs are not covered under this warranty.

Additional service fees may apply if you are seeking warranty service from a dealer.

Warranty labour allowance is only for the replacement of the warranted part. Travel, diagnostic tests, shipping and other related charges are not covered by this warranty.

ALL SPECIFICATIONS AND DESIGNS ARE SUBJECT TO CHANGE WITHOUT PRIOR NOTICE DUE TO ON-GOING PRODUCT IMPROVEMENTS. NAPOLEON® IS A REGISTERED TRADEMARK OF WOLF STEEL LTD.

Obadiah's · 406-300-1776

16.0 SERVICE HISTORY

Appliance Service History

This heater must be serviced annually depending on usage.

Date	Dealer Name	Service Technician Name	Service Performed	Special Concerns

Obadiah's · 406-300-1776

17.0 NOTES