INSTALLER: LEAVE THIS MANUAL WITH THE APPLIANCE.
CONSUMER: RETAIN THIS MANUAL FOR FUTURE REFERENCE.
NEVER LEAVE CHILDREN OR OTHER AT RISK INDIVIDUALS ALONE WITH THE APPLIANCE

NAPOLEON®
QUALITY FIREPLACES

INSTALLATION AND OPERATING INSTRUCTIONS

CERTIFIED UNDER CANADIAN AND AMERICAN NATIONAL STANDARDS: ANSI Z21.88, CSA 2.33 FOR VENTED GAS FIREPLACE HEATERS.

GDS25N
NATURAL GAS

GDS25P
PROPANE

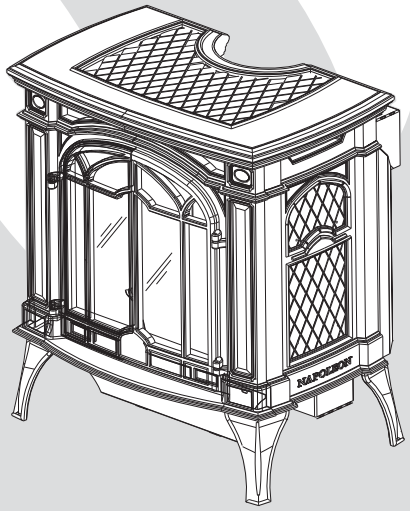

CERTIFIED FOR CANADA AND UNITED STATES USING ANSI/CSA METHODS.

SAFETY INFORMATION

WARNING

If the information in these instructions are not followed exactly, a fire or explosion may result causing property damage, personal injury or loss of life.

- Do not store or use gasoline or other flammable vapors and liquids in the vicinity of this or any other appliance.
- WHAT TO DO IF YOU SMELL GAS:

- **Do not try to light any appliance.**
- **Do not touch any electrical switch; do not use any phone in your building.**
- **Immediately call your gas supplier from a neighbour's phone. Follow the gas supplier's instructions.**
- **If you cannot reach your gas supplier, call the fire department.**

- Installation and service must be performed by a qualified installer, service agency or the supplier.

This appliance may be installed in an aftermarket, permanently located, manufactured home (USA only) or mobile home, where not prohibited by local codes.

This appliance is only for use with the type of gas indicated on the rating plate. This appliance is not convertible for use with other gases, unless a certified kit is used.

WARNING

HOT GLASS WILL CAUSE BURNS.

DO NOT TOUCH GLASS UNTIL COOLED.

NEVER ALLOW CHILDREN TO TOUCH GLASS.

APPLY SERIAL NUMBER LABEL FROM CARTON
Serial No. XXXXXX000000
MODEL NO.

HPBA Hearth, Patio & Barbecue Association
GO GREEN ECO-FRIENDLY TECHNOLOGY
Quality System Certified To ISO 9001-2008
C ETL LISTED US Intertek

Wolf Steel Ltd., 24 Napoleon Rd., Barrie, ON, L4M 0G8 Canada /
103 Miller Drive, Crittenden, Kentucky, USA, 41030
Phone (705)721-1212 • Fax (705)722-6031 • www.napoleonfireplaces.com • ask@napoleonproducts.com

$10.00 1.28C

Obadiah's · 406-300-1776

TABLE OF CONTENTS

1.0	**INSTALLATION OVERVIEW**	**3**
2.0	**INTRODUCTION**	**4**
2.1	DIMENSIONS	5
2.2	GENERAL INSTRUCTIONS	5
2.3	GENERAL INFORMATION	6
2.4	RATING PLATE INFORMATION	7
3.0	**VENTING**	**8**
3.1	VENTING LENGTHS AND COMPONENTS	8
3.2	SPECIAL VENT INSTALLATIONS	10
3.2.1	PERISCOPE TERMINATION	10
3.2.2	CORNER TERMINATION	10
3.3	VENT TERMINAL CLEARANCES	11
3.4	DEFINITIONS	12
3.5	ELBOW VENT LENGTH VALUES	12
3.6	HORIZONTAL TERMINATION	13
3.7	VERTICAL TERMINATION	15
3.8	VERTICAL THROUGH EXISTING CHIMNEY	17
4.0	**INSTALLATION**	**18**
4.1	WALL AND CEILING PROTECTION	18
4.1.1	HORIZONTAL INSTALLATION	19
4.1.2	VERTICAL INSTALLATION	19
4.2	HORIZONTAL AIR TERMINAL INSTALLATION	20
4.3	EXTENDED HORIZONTAL AND CORNER AIR TERMINAL INSTALLATION	20
4.4	VERTICAL AIR TERMINAL INSTALLATION	21
4.5	APPLIANCE VENT CONNECTION	22
4.6	GAS INSTALLATION	22
4.7	MOBILE HOME	23
4.8	MINIMUM CLEARANCE TO COMBUSTIBLES	24
4.9	MINIMUM MANTEL OR SHELF CLEARANCES	25
5.0	**FINISHING**	**26**
5.1	CAST FRONT INSTALLATION AND REMOVAL	26
5.2	GLASS DOOR INSTALLATION AND REMOVAL	27
5.3	LOG PLACEMENT	28
5.4	SWITCH FUNCTIONS	29
5.5	LOGO PLACEMENT	29
6.0	**OPTIONAL BLOWER INSTALLATION**	**30**
7.0	**WIRING DIAGRAM**	**31**
8.0	**OPERATION**	**32**
9.0	**ADJUSTMENT**	**33**
9.1	RESTRICTING VERTICAL VENTS	33
9.2	VENTURI ADJUSTMENT	33
9.3	FLAME CHARACTERISTICS	33
10.0	**MAINTENANCE**	**34**
10.1	NIGHT LIGHT REPLACEMENT	34
10.2	PILOT INJECTOR AND ORIFICE REPLACEMENT	35
10.3	CARE OF GLASS	35
10.4	CARE OF PLATED PARTS	35
11.0	**REPLACEMENT PARTS**	**36**
12.0	**TROUBLESHOOTING**	**40**
13.0	**WARRANTY**	**42**
14.0	**SERVICE HISTORY**	**43**

<u>NOTE:</u> Changes, other than editorial, are denoted by a vertical line in the margin.

1.0 INSTALLATION OVERVIEW

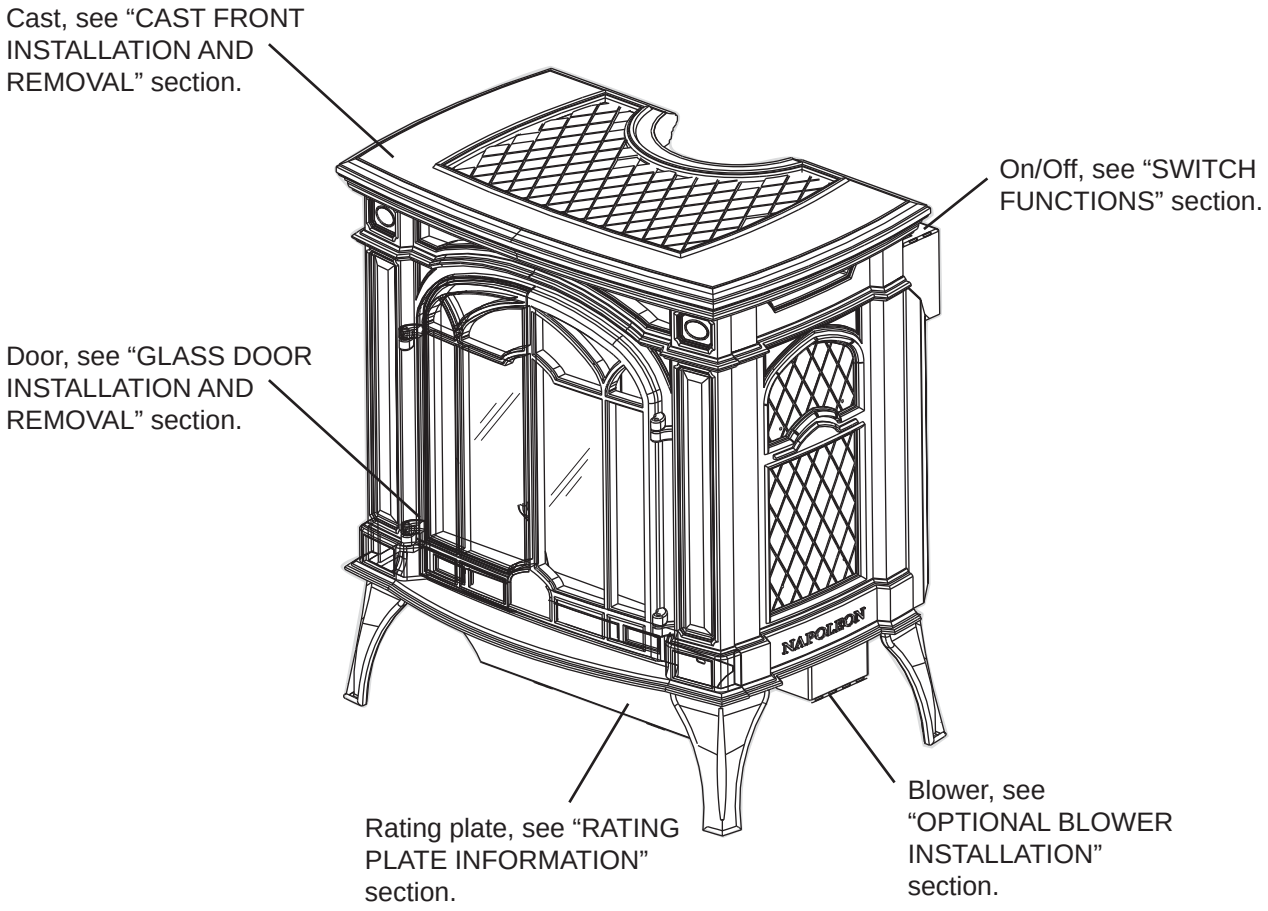

2.0 INTRODUCTION

⚠ WARNING

- **THIS APPLIANCE IS HOT WHEN OPERATED AND CAN CAUSE SEVERE BURNS IF CONTACTED.**
- **ANY CHANGES TO THIS APPLIANCE OR IT'S CONTROLS CAN BE DANGEROUS AND IS PROHIBITED.**
- Do not operate appliance before reading and understanding operating instructions. Failure to operate appliance according to operating instructions could cause fire or injury.
- Risk of fire or asphyxiation do not operate appliance with fixed glass removed.
- Do not connect 110 volts to the control valve.
- Risk of burns. The appliance should be turned off and cooled before servicing.
- Do not install damaged, incomplete or substitute components.
- Risk of cuts and abrasions. Wear protective gloves and safety glasses during installation. Sheet metal edges may be sharp.
- Do not burn wood or other materials in this appliance.
- Children and adults should be alerted to the hazards of high surface temperature and should stay away to avoid burns or clothing ignition.
- Young children should be carefully supervised when they are in the same room as the appliance. Toddlers, young children and others may be susceptible to accidental contact burns. A physical barrier is recommended if there are at risk individuals in the house. To restrict access to an appliance or stove, install an adjustable safety gate to keep toddlers, young children and other at risk individuals out of the room and away from hot surfaces.
- Clothing or other flammable material should not be placed on or near the appliance.
- Due to high temperatures, the appliance should be located out of traffic and away from furniture and draperies.
- Ensure you have incorporated adequate safety measure to protect infants/toddlers from touching hot surfaces.
- Even after the appliance is out, the glass and/or screen will remain hot for an extended period of time.
- Check with your local hearth specialty dealer for safety screens and hearth guards to protect children from hot surfaces. These screens and guards must be fastened to the floor.
- Any safety screen or guard removed for servicing must be replaced prior to operating the appliance.
- The appliance is a vented gas-fired appliance. Do not burn wood or other materials in the appliance.
- It is imperative that the control compartments, burners and circulating blower and its passageway in the appliance and venting system are kept clean. The appliance and its venting system should be inspected before use and at least annually by a qualified service person. More frequent cleaning may be required due to excessive lint from carpeting, bedding material, etc. The appliance area must be kept clear and free from combustible materials, gasoline and other flammable vapors and liquids.
- Under no circumstances should this appliance be modified.
- This appliance must not be connected to a chimney flue pipe serving a separate solid fuel burning appliance.
- Do not use this appliance if any part has been under water. Immediately call a qualified service technician to inspect the appliance and to replace any part of the control system and any gas control which has been under water.
- Do not operate the appliance with the glass door removed, cracked or broken. Replacement of the glass should be done by a licensed or qualified service person.
- Do not strike or slam shut the appliance glass door.
- When equipped with pressure relief doors, they must be kept closed while the appliance is operating to prevent exhaust fumes containing carbon monoxide, from entering into the home. Temperatures of the exhaust escaping through these openings can also cause the surrounding combustible materials to overheat and catch fire.Only doors / optional fronts certified with the unit are to be installed on the appliance.
- Only doors / optional fronts certified with the unit are to be installed on the appliance.
- Keep the packaging material out of reach of children and dispose of the material in a safe manner. As with all plastic bags, these are not toys and should be kept away from children and infants.
- As with any combustion appliance, we recommend having your appliance regularly inspected and serviced as well as having a Carbon Monoxide Detector installed in the same area to defend you and your family against Carbon Monoxide.
- Ensure clearances to combustibles are maintained when building a mantel or shelves above the appliance. Elevated temperatures on the wall or in the air above the appliance can cause melting, discolouration or damage to decorations, a T.V. or other electronic components.
- This appliance uses and requires a fast acting thermocouple. Replace only with a fast acting thermocouple supplied by Wolf Steel Ltd.

3.1C

2.1 DIMENSIONS

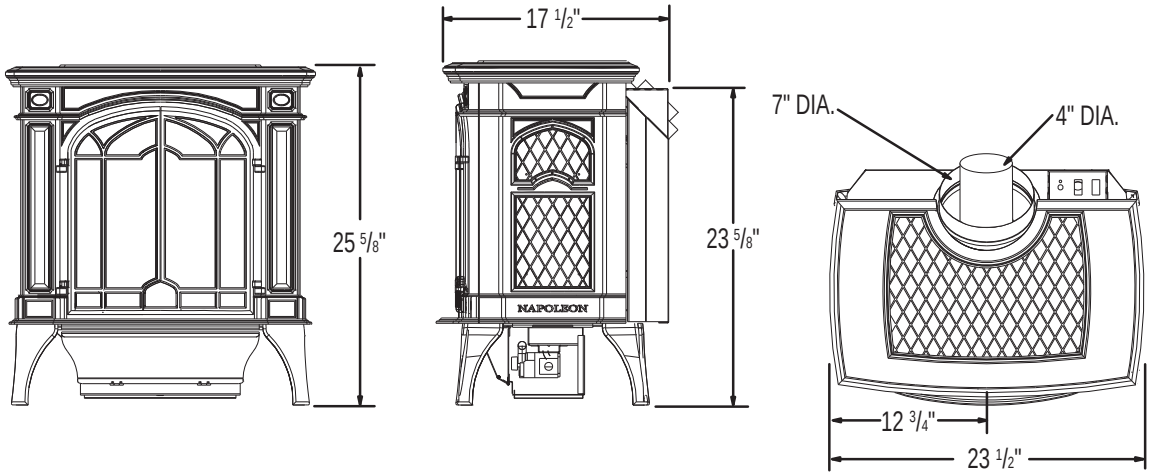

2.2 GENERAL INSTRUCTIONS

⚠ WARNING
ALWAYS LIGHT THE PILOT WHETHER FOR THE FIRST TIME OR IF THE GAS SUPPLY HAS RUN OUT, WITH THE GLASS DOOR OPENED OR REMOVED.
PROVIDE ADEQUATE CLEARANCE FOR SERVICING AND OPERATING THE APPLIANCE.
PROVIDE ADEQUATE VENTILATION.
NEVER OBSTRUCT THE FRONT OPENING OF THE APPLIANCE.
OBJECTS PLACED IN FRONT OF THE APPLIANCE MUST BE KEPT A MINIMUM OF 48” FROM THE FRONT FACE OF THE UNIT.
SURFACES AROUND AND ESPECIALLY ABOVE THE APPLIANCE CAN BECOME HOT. AVOID CONTACT WHEN THE APPLIANCE IS OPERATING.
FIRE RISK. EXPLOSION HAZARD.
HIGH PRESSURE WILL DAMAGE VALVE. DISCONNECT GAS SUPPLY PIPING BEFORE PRESSURE TESTING GAS LINE AT TEST PRESSURES ABOVE 1/2 PSIG. CLOSE THE MANUAL SHUT-OFF VALVE BEFORE PRESSURE TESTING GAS LINE AT TEST PRESSURES EQUAL TO OR LESS THAN 1/2 PSIG.
USE ONLY WOLF STEEL APPROVED OPTIONAL ACCESSORIES AND REPLACEMENT PARTS WITH THIS APPLIANCE. USING NON-LISTED ACCESSORIES (BLOWERS, DOORS, LOUVRES, TRIMS, GAS COMPONENTS, VENTING COMPONENTS, ETC.) COULD RESULT IN A SAFETY HAZARD AND WILL VOID THE WARRANTY AND CERTIFICATION.

THIS GAS APPLIANCE SHOULD BE INSTALLED AND SERVICED BY A QUALIFIED INSTALLER to conform with local codes. Installation practices vary from region to region and it is important to know the specifics that apply to your area, for example in Massachusetts State:

- This product must be installed by a licensed plumber or gas fitter when installed within the commonwealth of Massachusetts.
- The appliance damper must be removed or welded in the open position prior to installation of a appliance insert or gas log.
- The appliance off valve must be a “T” handle gas cock.
- The flexible connector must not be longer than 36 inches.
- A Carbon Monoxide detector is required in all rooms containing gas fired appliances.
- The appliance is not approved for installation in a bedroom or bathroom unless the unit is a direct vent sealed combustion product.

The installation must conform with local codes or, in absence of local codes, the National Gas and Propane Installation Code CSA B149.1 in Canada, or the National Fuel Gas Code, ANSI Z223.1 / NFPA 54 in the United States. Suitable for mobile home installation if installed in accordance with the current standard CAN/CSA Z240MH Series, for gas equipped mobile homes, in Canada or ANSI Z223.1 and NFPA 54 in the United States.

NATIONAL FIREPLACE INSTITUTE NFI CERTIFIED www.nficertified.org

We suggest that our gas hearth products be installed and serviced by professionals who are certified in the U.S. by the National Fireplace Institute® (NFI) as NFI Gas Specialists

As long as the required clearance to combustibles is maintained, the most desirable and beneficial location for an appliance is in the center of a building, thereby allowing the most efficient use of the heat created. The location of windows, doors and the traffic flow in the room where the appliance is to be located should be considered. If possible, you should choose a location where the vent will pass through the house without cutting a floor or roof joist.

If the appliance is installed directly on carpeting, vinyl tile or other combustible material other than wood flooring, the appliance shall be installed on a metal or wood panel extending the full width and depth.

Some appliances have optional fans or blowers. If an optional fan or blower is installed, the junction box must be electrically connected and grounded in accordance with local codes, use the current CSA C22.1 Canadian Electrical Code in Canada or the ANSI/NFPA 70 National Electrical code in the United States.

4.1A

2.3 GENERAL INFORMATION

FOR YOUR SATISFACTION, THIS APPLIANCE HAS BEEN TEST-FIRED TO ASSURE ITS OPERATION AND QUALITY!

	GDS25	
	NG	**LP**
Altitude (FT)	0-4,500	0-4,500
Max. Input (BTU/HR)	24,500	23,000
Max. Output (BTU/HR)	19,600	18,400
Efficiency (w/the fan on)	80%	80%
Min. Inlet Gas Supply Pressure	4.5" Water Column	11" Water Column
Max. Inlet Gas Supply Pressure	7" Water Column	13" Water Column
Manifold Pressure (Under Flow Conditions)	3.5" Water Column	10" Water Column

When the appliance is installed at elevations above 4,500ft, and in the absence of specific recommendations from the local authority having jurisdiction, the certified high altitude input rating shall be reduced at the rate of 4% for each additional 1,000ft.

Expansion / contraction noises during heating up and cooling down cycles are normal and to be expected.

This appliance is only for use with the type of gas indicated on the rating plate. This appliance is not convertible for use with other gases, unless a certified kit is used.

The blower power cord must be connected into a properly grounded receptacle. The grounding prong must not be removed from the cord plug.

This appliance is approved for closet or recessed installations, as well as for bathroom, bedroom and bed-sitting room installations and is suitable for mobile home installations. The natural gas model can be installed in a mobile home that is permanently positioned on its site and fueled with natural gas.

2.4 RATING PLATE INFORMATION

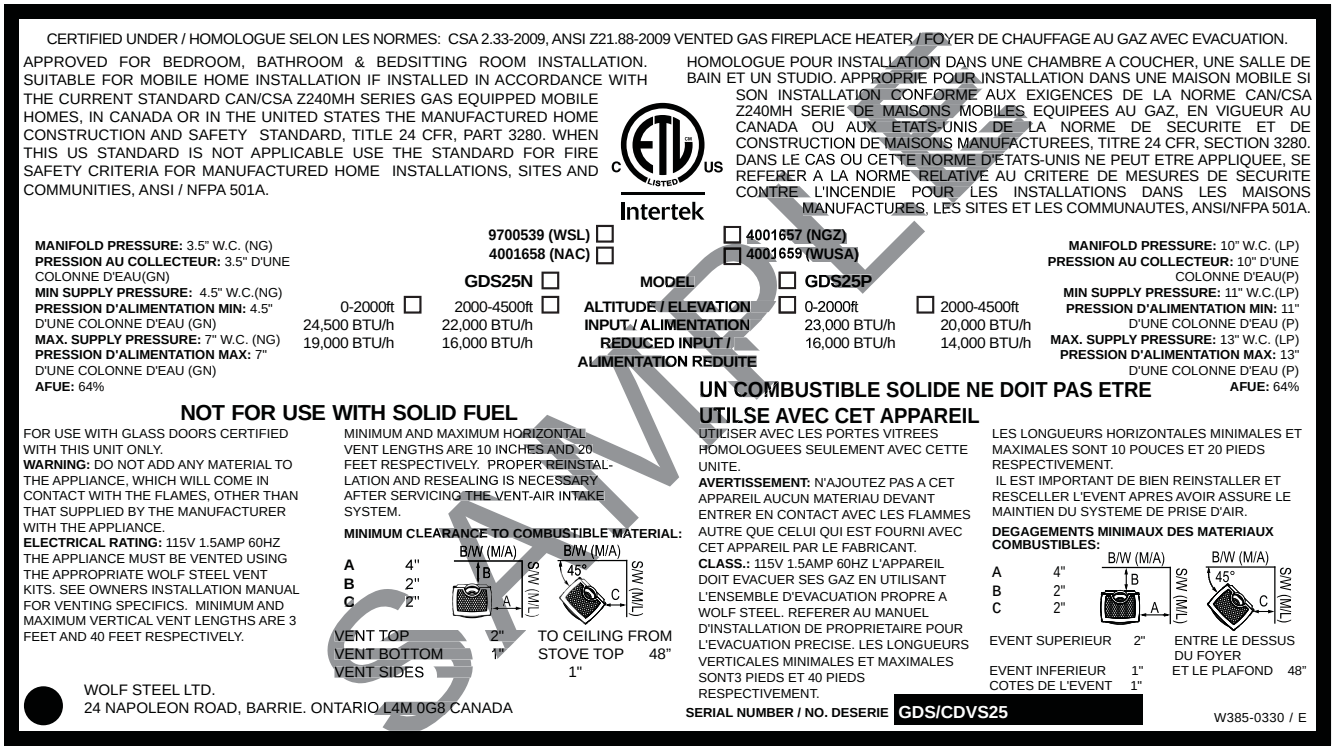

CERTIFIED UNDER / HOMOLOGUE SELON LES NORMES: CSA 2.33-2009, ANSI Z21.88-2009 VENTED GAS FIREPLACE HEATER / FOYER DE CHAUFFAGE AU GAZ AVEC EVACUATION.

APPROVED FOR BEDROOM, BATHROOM & BEDSITTING ROOM INSTALLATION. SUITABLE FOR MOBILE HOME INSTALLATION IF INSTALLED IN ACCORDANCE WITH THE CURRENT STANDARD CAN/CSA Z240MH SERIES GAS EQUIPPED MOBILE HOMES, IN CANADA OR IN THE UNITED STATES THE MANUFACTURED HOME CONSTRUCTION AND SAFETY STANDARD, TITLE 24 CFR, PART 3280. WHEN THIS US STANDARD IS NOT APPLICABLE USE THE STANDARD FOR FIRE SAFETY CRITERIA FOR MANUFACTURED HOME INSTALLATIONS, SITES AND COMMUNITIES, ANSI / NFPA 501A.

HOMOLOGUE POUR INSTALLATION DANS UNE CHAMBRE A COUCHER, UNE SALLE DE BAIN ET UN STUDIO. APPROPRIE POUR INSTALLATION DANS UNE MAISON MOBILE SI SON INSTALLATION CONFORME AUX EXIGENCES DE LA NORME CAN/CSA Z240MH SERIE DE MAISONS MOBILES EQUIPEES AU GAZ, EN VIGUEUR AU CANADA OU AUX ETATS-UNIS DE LA NORME DE SECURITE ET DE CONSTRUCTION DE MAISONS MANUFACTUREES, TITRE 24 CFR, SECTION 3280. DANS LE CAS OU CETTE NORME D'ETATS-UNIS NE PEUT ETRE APPLIQUEE, SE REFERER A LA NORME RELATIVE AU CRITERE DE MESURES DE SECURITE CONTRE L'INCENDIE POUR LES INSTALLATIONS DANS LES MAISONS MANUFACTURES, LES SITES ET LES COMMUNAUTES, ANSI/NFPA 501A.

MANIFOLD PRESSURE: 3.5" W.C. (NG)
PRESSION AU COLLECTEUR: 3.5" D'UNE COLONNE D'EAU(GN)
MIN SUPPLY PRESSURE: 4.5" W.C.(NG)
PRESSION D'ALIMENTATION MIN: 4.5" D'UNE COLONNE D'EAU (GN)
MAX. SUPPLY PRESSURE: 7" W.C. (NG)
PRESSION D'ALIMENTATION MAX: 7" D'UNE COLONNE D'EAU (GN)
AFUE: 64%

9700539 (WSL) ☐
4001658 (NAC) ☐

GDS25N ☐

	0-2000ft ☐	2000-4500ft ☐
ALTITUDE / ELEVATION		
INPUT / ALIMENTATION	24,500 BTU/h	22,000 BTU/h
REDUCED INPUT / ALIMENTATION REDUITE	19,000 BTU/h	16,000 BTU/h

MODEL

☐ 4001657 (NGZ)
☐ 4001659 (WUSA)

☐ **GDS25P**

	0-2000ft ☐	2000-4500ft ☐
INPUT / ALIMENTATION	23,000 BTU/h	20,000 BTU/h
REDUCED INPUT / ALIMENTATION REDUITE	16,000 BTU/h	14,000 BTU/h

MANIFOLD PRESSURE: 10" W.C. (LP)
PRESSION AU COLLECTEUR: 10" D'UNE COLONNE D'EAU(P)
MIN SUPPLY PRESSURE: 11" W.C.(LP)
PRESSION D'ALIMENTATION MIN: 11" D'UNE COLONNE D'EAU (P)
MAX. SUPPLY PRESSURE: 13" W.C. (LP)
PRESSION D'ALIMENTATION MAX: 13" D'UNE COLONNE D'EAU (P)
AFUE: 64%

NOT FOR USE WITH SOLID FUEL

FOR USE WITH GLASS DOORS CERTIFIED WITH THIS UNIT ONLY.
WARNING: DO NOT ADD ANY MATERIAL TO THE APPLIANCE, WHICH WILL COME IN CONTACT WITH THE FLAMES, OTHER THAN THAT SUPPLIED BY THE MANUFACTURER WITH THE APPLIANCE.
ELECTRICAL RATING: 115V 1.5AMP 60HZ THE APPLIANCE MUST BE VENTED USING THE APPROPRIATE WOLF STEEL VENT KITS. SEE OWNERS INSTALLATION MANUAL FOR VENTING SPECIFICS. MINIMUM AND MAXIMUM VERTICAL VENT LENGTHS ARE 3 FEET AND 40 FEET RESPECTIVELY.

MINIMUM AND MAXIMUM HORIZONTAL VENT LENGTHS ARE 10 INCHES AND 20 FEET RESPECTIVELY. PROPER REINSTALLATION AND RESEALING IS NECESSARY AFTER SERVICING THE VENT-AIR INTAKE SYSTEM.

MINIMUM CLEARANCE TO COMBUSTIBLE MATERIAL:

A	4"
B	2"
C	2"

VENT TOP	2"	TO CEILING FROM STOVE TOP	48"
VENT BOTTOM	1"		
VENT SIDES	1"		

WOLF STEEL LTD.
24 NAPOLEON ROAD, BARRIE. ONTARIO L4M 0G8 CANADA

UN COMBUSTIBLE SOLIDE NE DOIT PAS ETRE UTILSE AVEC CET APPAREIL

UTILISER AVEC LES PORTES VITREES HOMOLOGUEES SEULEMENT AVEC CETTE UNITE.
AVERTISSEMENT: N'AJOUTEZ PAS A CET APPAREIL AUCUN MATERIAU DEVANT ENTRER EN CONTACT AVEC LES FLAMMES AUTRE QUE CELUI QUI EST FOURNI AVEC CET APPAREIL PAR LE FABRICANT.
CLASS.: 115V 1.5AMP 60HZ L'APPAREIL DOIT EVACUER SES GAZ EN UTILISANT L'ENSEMBLE D'EVACUATION PROPRE A WOLF STEEL. REFERER AU MANUEL D'INSTALLATION DE PROPRIETAIRE POUR L'EVACUATION PRECISE. LES LONGUEURS VERTICALES MINIMALES ET MAXIMALES SONT3 PIEDS ET 40 PIEDS RESPECTIVEMENT.

LES LONGUEURS HORIZONTALES MINIMALES ET MAXIMALES SONT 10 POUCES ET 20 PIEDS RESPECTIVEMENT.
IL EST IMPORTANT DE BIEN REINSTALLER ET RESCELLER L'EVENT APRES AVOIR ASSURE LE MAINTIEN DU SYSTEME DE PRISE D'AIR.

DEGAGEMENTS MINIMAUX DES MATERIAUX COMBUSTIBLES:

A	4"
B	2"
C	2"

EVENT SUPERIEUR	2"	ENTRE LE DESSUS DU FOYER ET LE PLAFOND	48"
EVENT INFERIEUR	1"		
COTES DE L'EVENT	1"		

SERIAL NUMBER / NO. DESERIE GDS/CDVS25

W385-0330 / E

SAMPLE

INSTALLER: It is your responsibility to check off the appropriate box on the rating plate according to the model, venting and gas type of the unit.

For rating plate location, see “INSTALLATION OVERVIEW” section.

This illustration is for referece only. Refer to the rating plate on the appliance for accurate information.

3.0 VENTING

⚠ WARNING

RISK OF FIRE, MAINTAIN SPECIFIED AIR SPACE CLEARANCES TO VENT PIPE AND APPLIANCE.

IF VENTING IS INCLUDED WITH SPACERS THE VENT SYSTEM MUST BE SUPPORTED EVERY 3 FEET FOR BOTH VERTICAL AND HORIZONTAL RUNS. USE SUPPORTS OR EQUIVALENT NON-COMBUSTIBLE STRAPPING TO MAINTAIN THE REQUIRED CLEARANCE FROM COMBUSTIBLES. USE WOLF STEEL LTD. SUPPORT RING ASSEMBLY W010-0370 OR EQUIVALENT NON-COMBUSTIBLE STRAPPING TO MAINTAIN THE MINIMUM CLEARANCE TO COMBUSTIBLES FOR BOTH VERTICAL AND HORIZONTAL RUNS. SPACERS ARE ATTACHED TO THE INNER PIPE AT PREDETERMINED INTERVALS TO MAINTAIN AN EVEN AIR GAP TO THE OUTER PIPE. THIS GAP IS REQUIRED FOR SAFE OPERATION. A SPACER IS REQUIRED AT THE START, MIDDLE AND END OF EACH ELBOW TO ENSURE THIS GAP IS MAINTAINED. THESE SPACERS MUST NOT BE REMOVED.

THIS APPLIANCE USES A 4” EXHAUST / 7” AIR INTAKE VENT PIPE SYSTEM.
Refer to the section applicable to your installation.

For safe and proper operation of the appliance follow the venting instruction exactly. Deviation from the minimum vertical vent length can create difficulty in burner start-up and/or carboning. Under extreme vent configurations, allow several minutes (5-15) for the flame to stabilize after ignition. Provide a means for visually checking the vent connection to the appliance after the appliance is installed. Use a firestop, vent pipe shield or attic insulation shield when penetrating interior walls, floor or ceiling.
NOTE: If for any reason the vent air intake system is disassembled; reinstall per the instructions provided for the initial installation.

7.1A

3.1 VENTING LENGTHS AND COMPONENTS

Use only Wolf Steel, Simpson Dura-Vent, Selkirk Direct Temp, American Metal Amerivent or Metal-Fab venting components. Minimum and maximum vent lengths, for both horizontal and vertical installations, and air terminal locations for either system are set out in this manual and must be adhered to. For Simpson Dura-Vent, Selkirk Direct Temp, American Metal Amerivent and Metal-Fab follow the installation procedure provided with the venting components.

A starter adaptor must be used with the following vent systems and may be purchased from the corresponding supplier:

PART	4”/7”	SUPPLIER	WEBSITE
Duravent	GDS924N	Wolf Steel	www.duravent.com
Amerivent	4DSC-N2	American Metal	www.americanmetalproducts.com
Direct Temp	4DT-AAN	Selkirk	www.selkirkcorp.com
SuperSeal	4DNA	Metal-Fab	www.mtlfab.com

*** For Simpson Dura-Vent, Selkirk Direct Temp, American Metal Amerivent and Metal-Fab follow the installation procedure found on the website for your venting supplier.**

For vent systems that provide seals on the inner exhaust flue, only the outer air intake joints must be sealed using a red high temperature silicone (RTV). This same sealant may be used on both the inner exhaust and outer intake vent pipe joints of all other approved vent systems except for the exhaust vent pipe connection to the appliance flue collar which must be sealed using the black high temperature sealant Mill Pac.

When using Wolf Steel venting components, use only approved Wolf Steel termination kits: wall terminal kit **GD175** (7/12’ of venting included), or 1/12 to 7/12 pitch roof terminal kit **GD110**, 8/12 to 12/12 roof terminal kit **GD111**, flat roof terminal kit **GD112** or periscope kit **GD180** (for wall penetration below grade) in conjunction with the appropriate venting components.

For optimum flame appearance and appliance operation, keep the vent length and number of elbows to a minimum. It is recommended that all horizontal runs have a minimum 1/4” rise per foot. The air terminal must remain unobstructed at all times. Examine the air terminal at least once a year to verify that it is unobstructed and undamaged. Rigid and flexible venting systems must not be combined. Different venting manufacturers components must not be combined.

These vent kits allow for either horizontal or vertical venting of the appliance. The maximum allowable horizontal run is 20 feet. The maximum allowable vertical vent length is 40 feet. The maximum number of vent connections is two horizontally or three vertically (excluding the appliance and the air terminal connections) when using flexible venting.

Deviation from the minimum vertical vent length can create difficulty in burner start-up and/or carboning. Use an adjustable pipe as the final length of rigid piping to the stove for ease of installation.

8.5

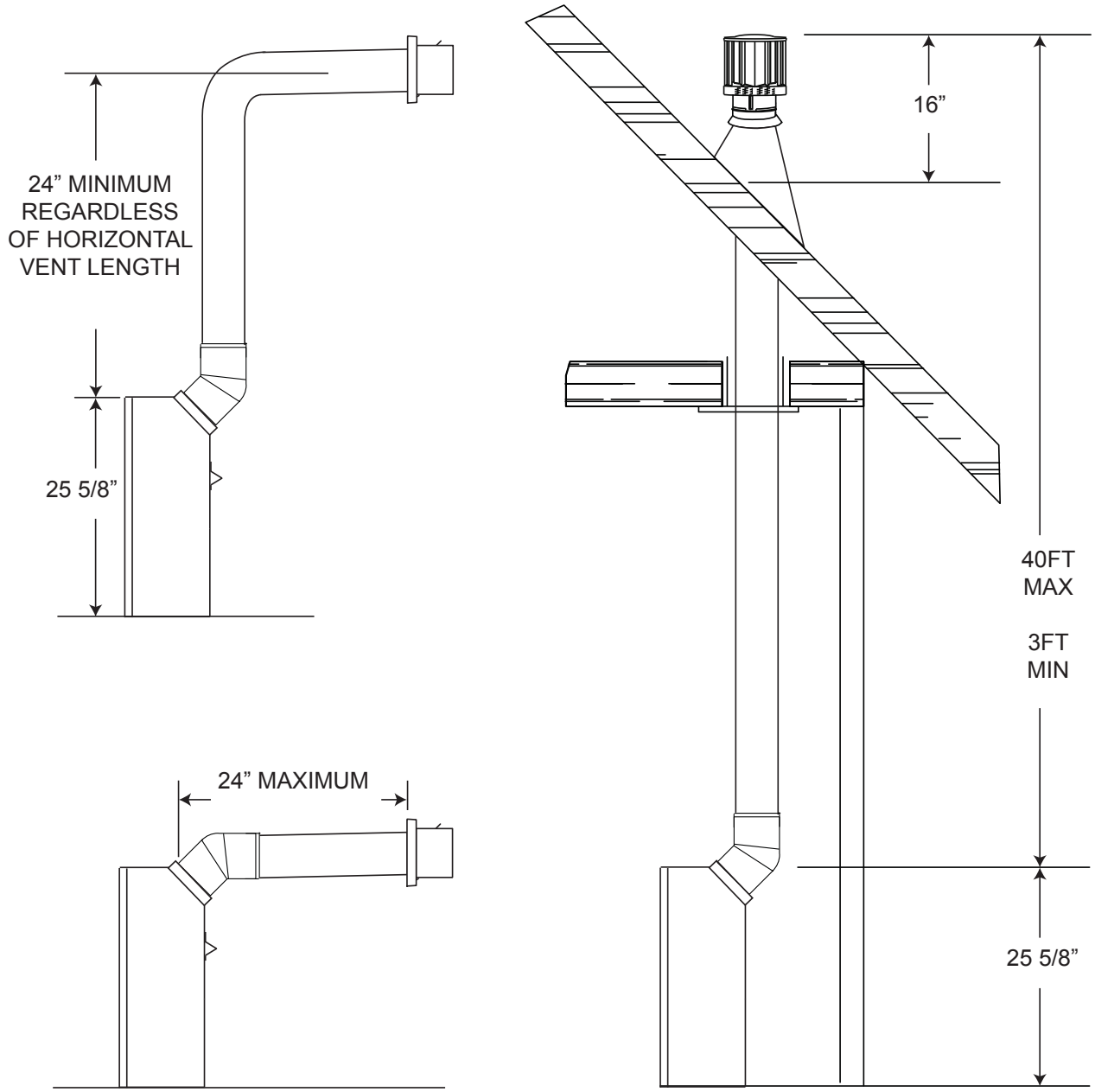

The maximum horizontal run with a 57” vertical rise immediately above the appliance is 20 feet.

3.2 SPECIAL VENT INSTALLATIONS

3.2.1 PERISCOPE TERMINATION

Use the periscope kit to locate the air termination above grade. The periscope must be installed so that when final grading is completed, the bottom air slot is located a minimum of 12” above grade. The maximum allowable vent length is 10’ for a fireplace and 8’ for a stove.

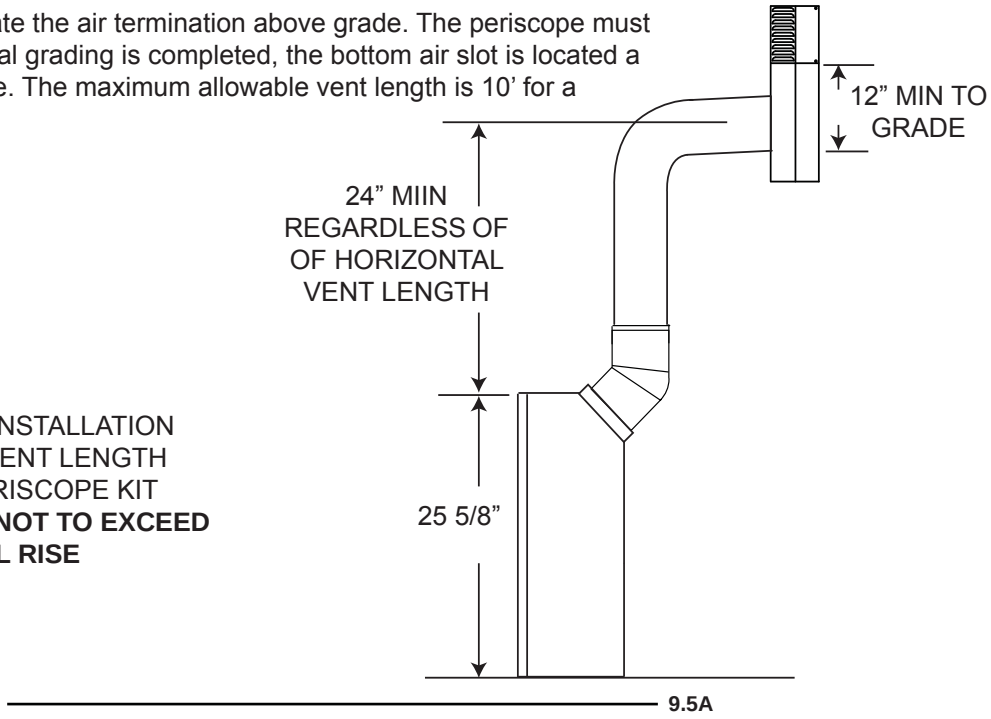

BELOW GRADE INSTALLATION
MAXIMUM 8FT VENT LENGTH
USE GD201 PERISCOPE KIT
HORIZONTAL RUN NOT TO EXCEED VERTICAL RISE

3.2.2 CORNER TERMINATION

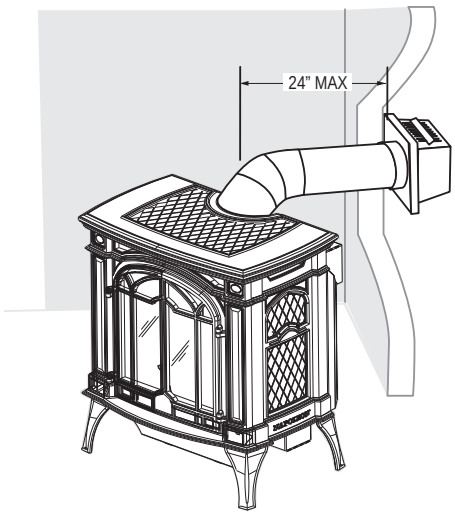

3.3 VENT TERMINAL CLEARANCES

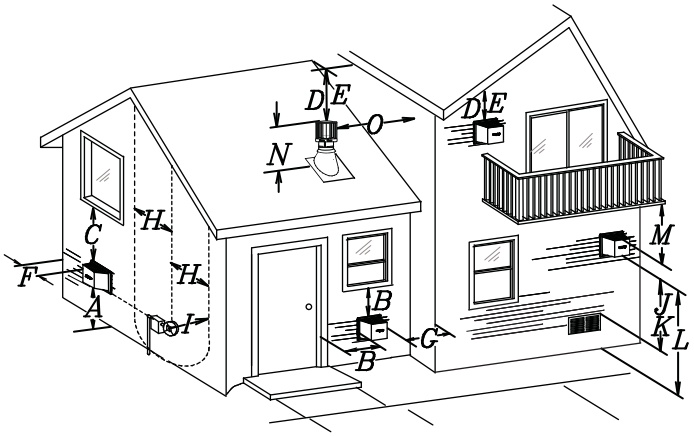

COVERED BALCONY APPLICATIONS ††*

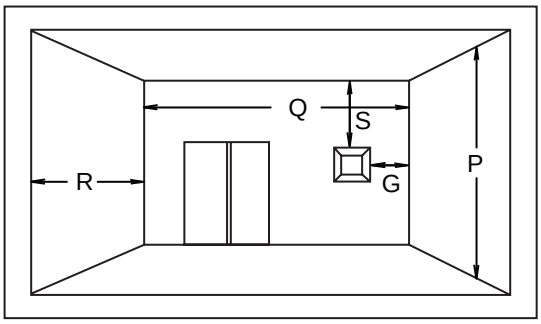

Q_{MIN}	= 3 feet
R_{MAX}	= 2 x Q_{ACTUAL}
R_{MAX}	≤ 15 feet

	INSTALLATIONS		
	CANADA	U.S.A.	
A	12”	12”	Clearance above grade, veranda porch, deck or balcony.
B	12” Δ	9” Δ	Clearance to windows or doors that open.
C	12” *	12” *	Clearance to permanently closed windows.
D	18” **	18” **	Vertical clearance to ventilated soffits located above the terminal within a horizontal distance of 2’ from the center line of the terminal.
E	12” **	12” **	Clearance to unventilated soffit.
F	0”	0”	Clearance to an outside corner wall.
G	0” ***	0” ***	Clearance to an inside **non**-combustible corner wall or protruding **non**-combustible obstructions (chimney, etc.).
	2” ***	2” ***	Clearance to an inside combustible corner wall or protruding combustible obstructions (vent chase, etc.).
H	3’	3’ ****	Clearance to each side of the center line extended above the meter / regulator assembly to a maximum vertical distance of 15’.
I	3’	3’ ****	Clearance to a service regulator vent outlet.
J	12”	9”	Clearance to a non-mechanical air supply inlet to the building or a combustion air inlet to any other appliance.
K	6’	3’ †	Clearance to a mechanical air supply inlet.
L	7’ ‡	7’ ****	Clearance above a paved sidewalk or paved driveway located on public property.
M	12” ††	12” ****	Clearance under a veranda, porch or deck.
N	16”	16”	Clearance above the roof.
O	2’ †*	2’ †*	Clearance from an adjacent wall including neighbouring buildings.
P	8’	8’	Roof must be **non**-combustible without openings.
Q	3’	3’	See chart for wider wall dimensions.
R	6’	6’	See chart for deeper wall dimensions. The terminal shall not be installed on any wall that has an opening between the terminal and the open side of the structure.
S	12”	12”	Clearance under a covered balcony

Δ The terminal shall not be located less than 6 feet under a window that opens on a horizontal plane in a structure with three walls and a roof.

* Recommended to prevent condensation on windows and thermal breakage

** It is recommended to use a heat shield and to maximize the distance to vinyl clad soffits.

*** The periscope requires a minimum 18 inches clearance from an inside corner.

**** This is a recommended distance. For additional requirements check local codes.

† 3 feet above if within 10 feet horizontally.

‡ A vent shall not terminate where it may cause hazardous frost or ice accumulations on adjacent property surfaces.

†† Permitted only if the veranda, porch, or deck is fully open on a minimum of two sides beneath the floor.

†* Recommended to prevent recirculation of exhaust products. For additional requirements check local codes.

††* Permitted only if the balcony is fully open on a minimum of one side.

NOTE: **Clearances are in accordance with local installation codes and the requirements of the gas supplier.**

Obadiah's · 406-300-1776

3.4 DEFINITIONS

For the following symbols used in the venting calculations and examples are:

> - greater than
≥ - equal to or greater than
< - less than
≤ - equal to or less than
H_T - total of both horizontal vent lengths (Hr) and offsets (Ho) in feet
H_R - combined horizontal vent lengths in feet
H_O - offset factor: .03 (total degrees of offset - 135°*) in feet
V_T - combined vertical vent lengths in feet

14.2

3.5 ELBOW VENT LENGTH VALUES

	FEET	INCHES
1°	0.03	0.5
15°	0.45	6.0
30°	0.9	11.0
45°*	1.35	16.0
90°*	2.7	32.0

* The first 45° and 90°offset has a zero value and is shown in the formula as -45° and - 90° respectively or -135° when combined.

15.2

3.6 HORIZONTAL TERMINATION

$(H_T) \leq (V_T)$

Simple venting configuration (only one 45° and 90° elbow)

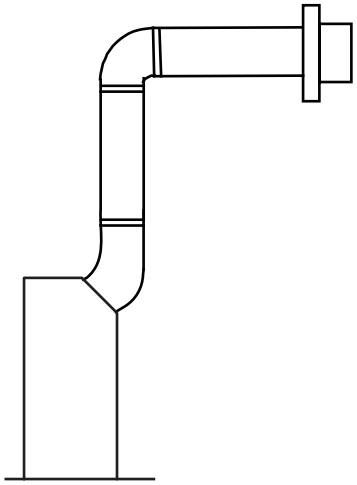

See graph to determine the required vertical rise V_T for the required horizontal run H_T.

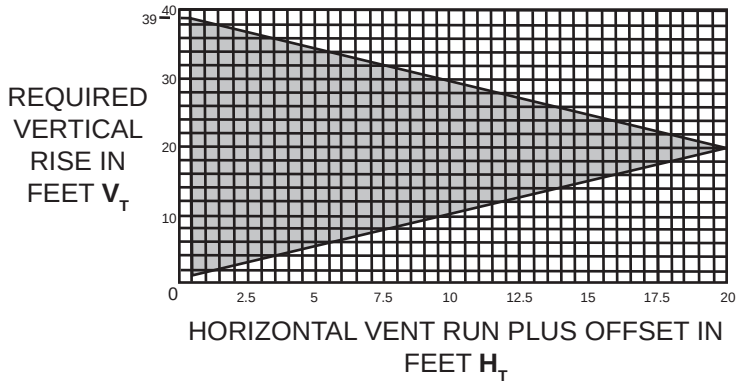

The shaded area within the lines represents acceptable values for H_T and V_T

For vent configurations requiring more than one 45° elbow and 90° elbow, the following formulas apply:

Formula 1: $H_T \leq V_T$
Formula 2: $H_T + V_T \leq 40$ feet

Example:

V_1 = 8 FT
$V_T = V_1$ = 8 FT
H_1 = 2.5 FT
H_2 = 2 FT
$H_R = H_1 + H_2$ = 2.5 + 2 = 4.5 FT
H_O = .03 (one 45° elbow + two 90° elbows - 135°) = .03 (225 - 135°) = 2.7 FT
$H_T = H_R + H_O$ = 4.5 + 2.7 = 7.2 FT
$H_T + V_T$ = 7.2 + 8 = 15.2 FT

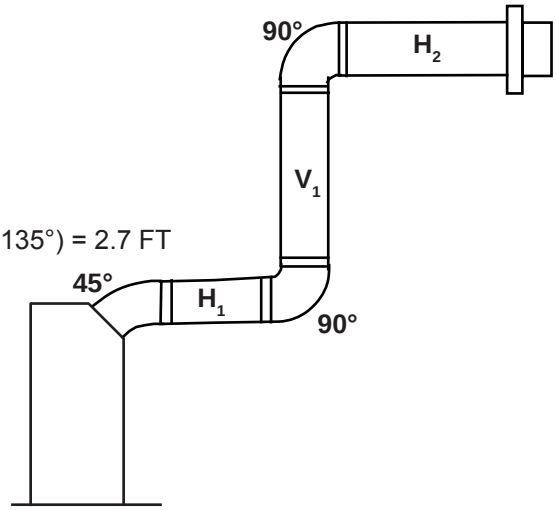

Formula 1: $H_T \leq V_T$
$7.2 \leq 8$

Formula 2: $H_T + V_T \leq 40$ FT
$15.2 \leq 40$

Since both formulas are met, this vent configuration is acceptable.

16.5

$(H_T) > (V_T)$

Simple venting configuration (only one 45° and 90° elbow)

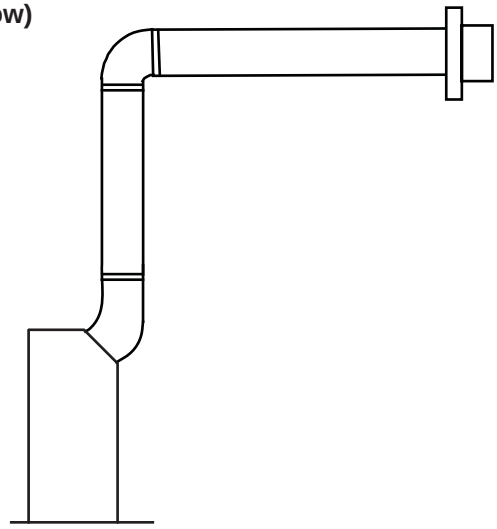

See graph to determine the required vertical rise V_T for the required horizontal run H_T.

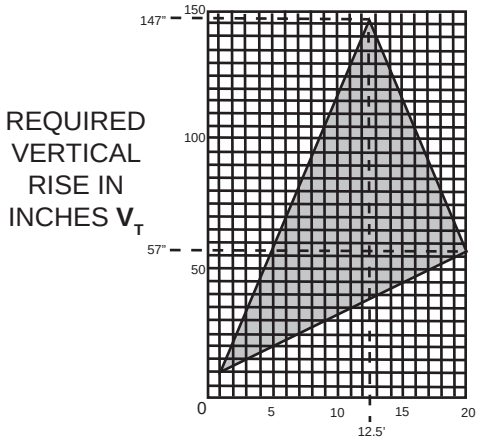

HORIZONTAL VENT RUN PLUS OFFSET IN FEET H_T

The shaded area within the lines represents acceptable values for H_T and V_T

For vent configurations requiring more than one 45° elbow and 90° elbow, the following formulas apply:

Formula 1: $H_T \leq 4.2\ V_T$

Formula 2: $H_T + V_T \leq 24.75$ feet

Example:

V_1 = 4 FT

V_2 = 1.5 FT

$V_T = V_1 + V_2$ = 4 FT + 1.5 FT = 5.5 FT

H_1 = 2 FT

H_2 = 1 FT

H_3 = 1 FT

H_4 = 1.5 FT

$H_R = H_1 + H_2 + H_3 + H_4$ = 2 + 1 + 1 + 1.5 = 5.5 FT

H_O = .03 (one 45° elbow + four 90° elbows - 135°) = .03 (405 - 135°) = 8.1 FT

$H_T = H_R + H_O$ = 5.5 + 8.1 = 13.6 FT

$H_T + V_T$ = 13.6 + 5.5 = 19.1 FT

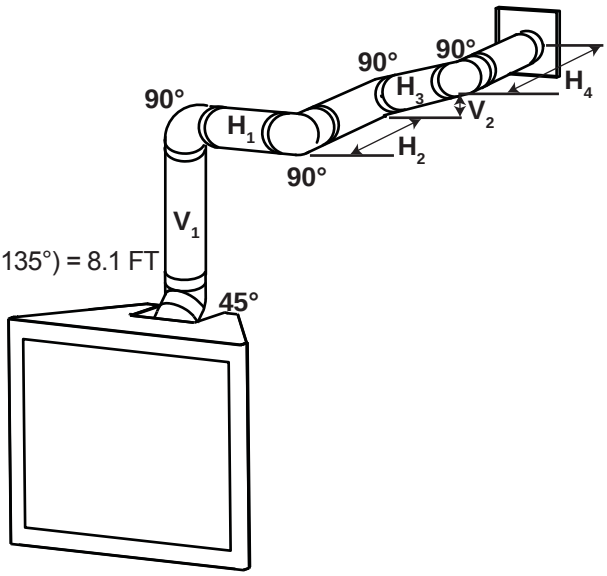

Formula 1: $H_T \leq 4.2\ V_T$

$4.2\ V_T$ = 4.2 x 5.5 FT = 23.1 FT

13.6 ≤ 23.1

Formula 2: $H_T + V_T \leq 24.75$ **FT**

19.1 ≤ 24.75

Since both formulas are met, this vent configuration is acceptable.

16.5_2

3.7 VERTICAL TERMINATION

$(H_T) \leq (V_T)$

Simple venting configurations.

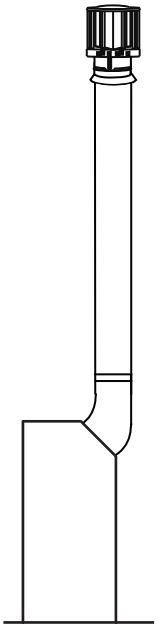

See graph to determine the required vertical rise V_T for the required horizontal run H_T.

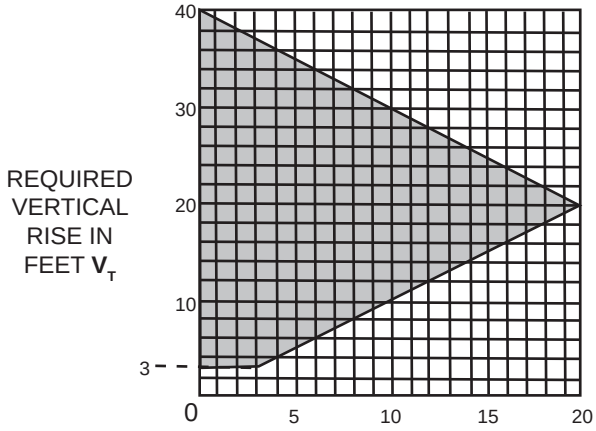

HORIZONTAL VENT RUN PLUS OFFSET IN FEET H_T

The shaded area within the lines represents acceptable values for H_T and V_T

For vent configurations requiring more than one 45° and one 90° elbow, the following formulas apply:
Formula 1: $H_T \leq V_T$
Formula 2: $H_T + V_T \leq 40$ feet

Example:
V_1 = 5 FT
V_2 = 10 FT
$V_T = V_1 + V_2$ = 5 + 10 = 15 FT
H_1 = 3 FT
H_2 = 2.5 FT
$H_R = H_1 + H_2$ = 3 + 2.5 = 5.5 FT
H_O = .03 (one 45° + three 90° elbows - 135°)
= .03 (45 + 270 - 135°) = 5.4 FT
$H_T = H_R + H_O$ = 5.5 + 5.4 = 10.9 FT
$H_T + V_T$ = 10.9 + 15 = 25.9 FT

Formula 1: $H_T \leq V_T$
$10.9 \leq 15$
Formula 2: $H_T + V_T \leq$ **40 FT**
$25.9 \leq 40$
Since both formulas are met, this vent configuration is acceptable.

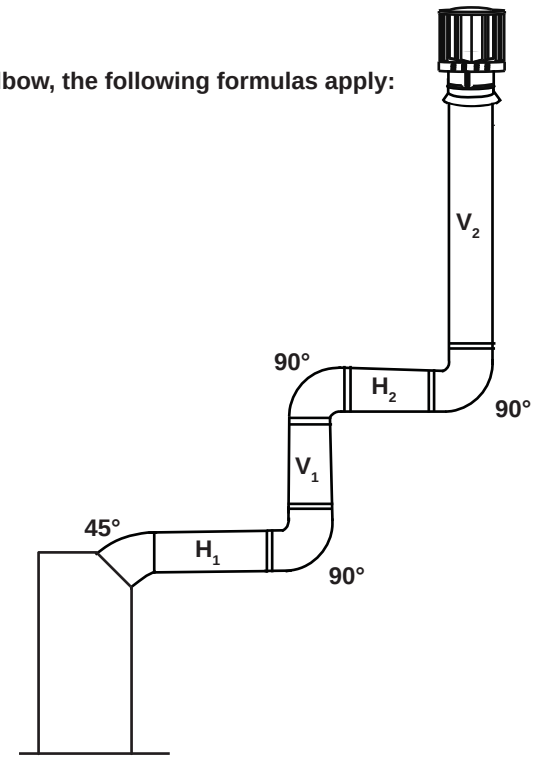

18.3

$(H_T) > (V_T)$

Simple venting configurations.

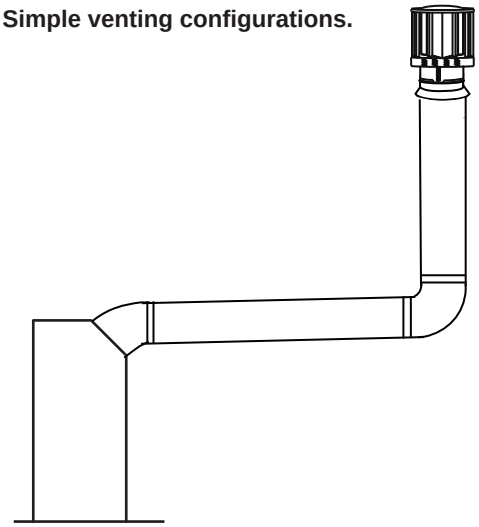

See graph to determine the required vertical rise V_T for the required horizontal run H_T.

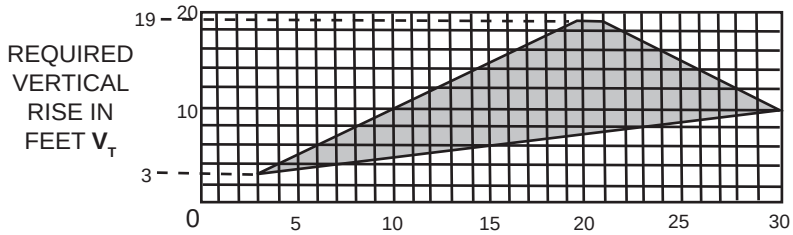

HORIZONTAL VENT RUN PLUS OFFSET IN FEET H_T

The shaded area within the lines represents acceptable values for H_T and V_T

For vent configurations requiring more than one 45° and one 90° elbow, the following formulas apply:

Formula 1: $H_T \leq 3V_T$
Formula 2: $H_T + V_T \leq 40$ feet

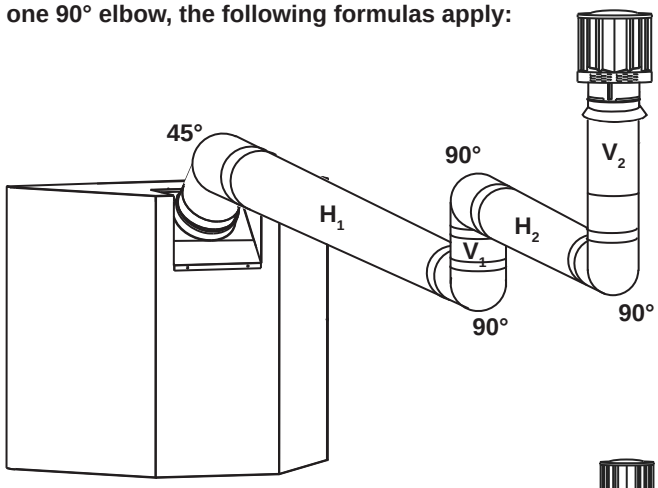

Example:
V_1 = 1 FT
V_2 = 1.5 FT
$V_T = V_1 + V_2$ = 1 + 1.5 = 2.5 FT
H_1 = 6 FT
H_2 = 2 FT
$H_R = H_1 + H_2$ = 6 + 2 = 8 FT
H_O = .03 (one 45° + three 90° elbows - 135°)
= .03 (45 + 270 - 135°) = 5.4 FT
$H_T = H_R + H_O$ = 8 + 5.4 = 13.4 FT
$H_T + V_T$ = 13.4 + 2.5 = 15.9 FT

Formula 1: $H_T \leq 3V_T$
$3V_T$ = 3 x 2.5 = 7.5 FT
13.4 > 7.5

Since this formula is not met, this vent configuration is **<u>un</u>acceptable.**

Formula 2: $H_T + V_T \leq 40$ FT
15.9 ≤ 40

Since only formula 2 is met, this vent configuration in unacceptable and a new fireplace location or vent configuration will need to be established to satisfy both formulas.

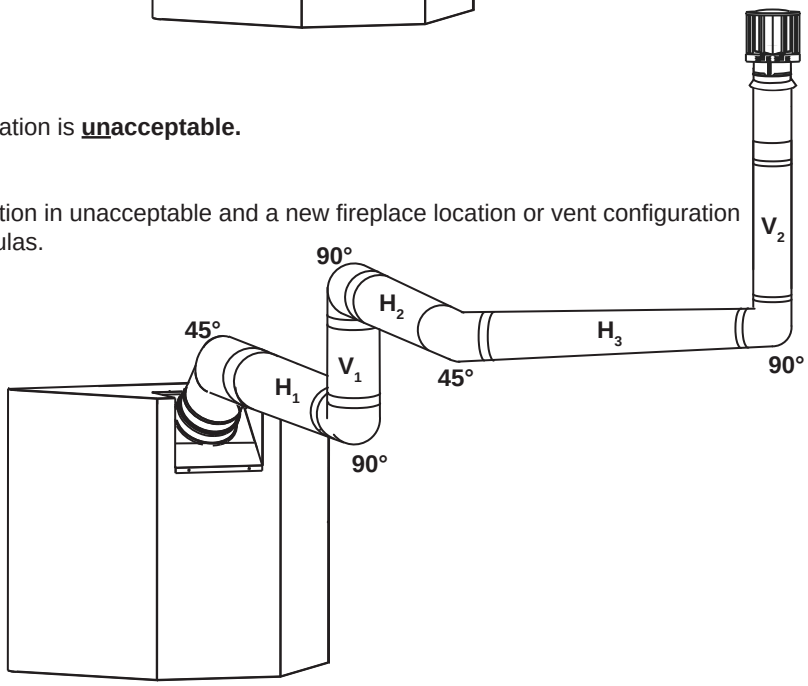

Example:
V_1 = 1.5 FT
V_2 = 8 FT
$V_T = V_1 + V_2$ = 1.5 + 8 = 9.5 FT
H_1 = 1 FT
H_2 = 1 FT
H_3 = 10.75 FT
$H_R = H_1 + H_2 + H_3$ = 1 + 1 + 10.75 = 12.75 FT
H_O = .03 (three 90° elbows + two 45° elbows - 135°)
= .03 (270 + 90 - 135°) = 6.75 FT
$H_T = H_R + H_O$ = 12.75 + 6.75 = 19.5 FT
$H_T + V_T$ = 19.5 + 9.5 = 29 FT

Formula 1: $H_T \leq 3V_T$
$3V_T$ = 3 x 9.5 = 28.5 FT
19.5 ≤ 28.5

Formula 2: $H_T + V_T \leq 40$ FT
29 ≤ 40

Since both formulas are met, this vent configuration is acceptable.

18.3_2A

3.8 VERTICAL THROUGH EXISTING CHIMNEY

⚠ WARNING

RISK OF FIRE!

CO-AXIAL TO CO-LINEAR VENTING CONFIGURATIONS MUST ONLY BE USED IN A NON-COMBUSTIBLE CHIMNEY OR ENCLOSURE. INSTALLATION IN A COMBUSTIBLE ENCLOSURE COULD RESULT IN A FIRE.

This appliance is designed to be attached to a 3” co-linear aluminum flex vent system running the full length of a masonry chimney.

The flex liners accommodate any contours of a masonry chimney, however, it is necessary to keep the flexible liners as straight as possible. The inlet air collar of the termination cap must be connected to the air intake flex liner and the exhaust collar must be connected to the exhaust flexible liner.

Both Simpson Duravent and Selkirk co-linear to co-axial adaptors have been approved on this appliance (**NOTE: A vent adaptor will be required directly off the appliance**). Follow vent manufacturer’s installation instructions.

Different manufacturer’s venting components must not be combined. Once the preferred manufacturer’s appliance adaptor has been attached, the remainder of the system must be that of the same manufacturer.

The only exception to this rule is to use Wolf Steel’s approved 3” flex liner and co-linear termination.

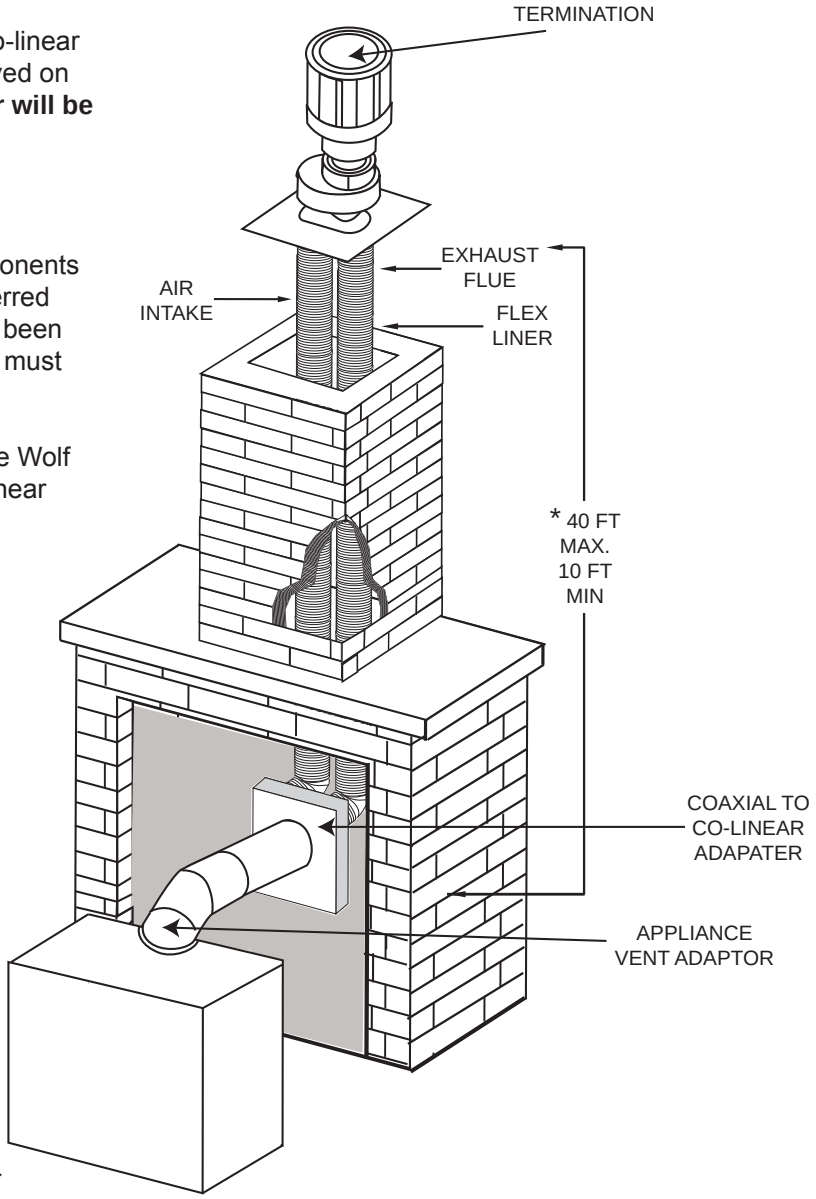

* Measured from appliance flue collar to termination flue collar

Obadiah's · 406-300-1776

4.0 INSTALLATION

⚠ WARNING

FOR SAFE AND PROPER OPERATION OF THE APPLIANCE, FOLLOW THE VENTING INSTRUCTIONS EXACTLY.

ALL INNER EXHAUST AND OUTER INTAKE VENT PIPE JOINTS MAY BE SEALED USING EITHER RED RTV HIGH TEMP SILICONE SEALANT W573-0002 (NOT SUPPLIED) OR BLACK HIGH TEMP MILL PAC W573-0007 (NOT SUPPLIED) WITH THE EXCEPTION OF THE APPLIANCE EXHAUST FLUE COLLAR WHICH MUST BE SEALED USING MILL PAC.

IF USING PIPE CLAMPS TO CONNECT VENT COMPONENTS, 3 SCREWS MUST ALSO BE USED TO ENSURE THE CONNECTION CANNOT SLIP OFF.

DO NOT CLAMP THE FLEXIBLE VENT PIPE.

RISK OF FIRE, EXPLOSION OR ASPHYXIATION. IMPROPER SUPPORT OF THE ENTIRE VENTING SYSTEM MAY ALLOW VENT TO SAG AND SEPARATE. USE VENT RUN SUPPORTS AND CONNECT VENT SECTIONS PER INSTALLATION INSTRUCTIONS.

RISK OF FIRE, DO NOT ALLOW LOOSE MATERIALS OR INSULATION TO TOUCH THE VENT PIPE. REMOVE INSULATION TO ALLOW FOR THE INSTALLATION OF THE ATTIC SHIELD AND TO MAINTAIN CLEARANCES TO COMBUSTIBLES.

68.2A

4.1 WALL AND CEILING PROTECTION

⚠ WARNING

DO NOT FILL THE SPACE BETWEEN THE VENT PIPE AND ENCLOSURE WITH ANY TYPE OF MATERIAL. DO NOT PACK INSULATION OR COMBUSTIBLES BETWEEN CEILING FIRESTOPS. ALWAYS MAINTAIN SPECIFIED CLEARANCES AROUND VENTING AND FIRESTOP SYSTEMS. INSTALL WALL SHIELDS AND FIRESTOPS AS SPECIFIED. FAILURE TO KEEP INSULATION OR OTHER MATERIALS AWAY FROM VENT PIPE MAY CAUSE FIRE.

70.1

4.1.1 HORIZONTAL INSTALLATION

⚠ WARNING

THE FIRESTOP ASSEMBLY MUST BE INSTALLED WITH THE VENT SHIELD TO THE TOP.

TERMINALS MUST NOT BE RECESSED INTO A WALL OR SIDING MORE THAN THE DEPTH OF THE RETURN FLANGE OF THE MOUNTING PLATE.

This application occurs when venting through an exterior wall. Having determined the correct height for the air terminal location, cut and frame a hole in the exterior wall as illustrated to accommodate the firestop assembly. Dry fit the firestop assembly before proceeding to ensure the brackets on the rear surface fit to the inside surface of the horizontal framing.

The length of the vent shield may be cut shorter for combustible walls that are less than 8 1/2” thick but the vent shield must extend the full depth of the combustible wall.

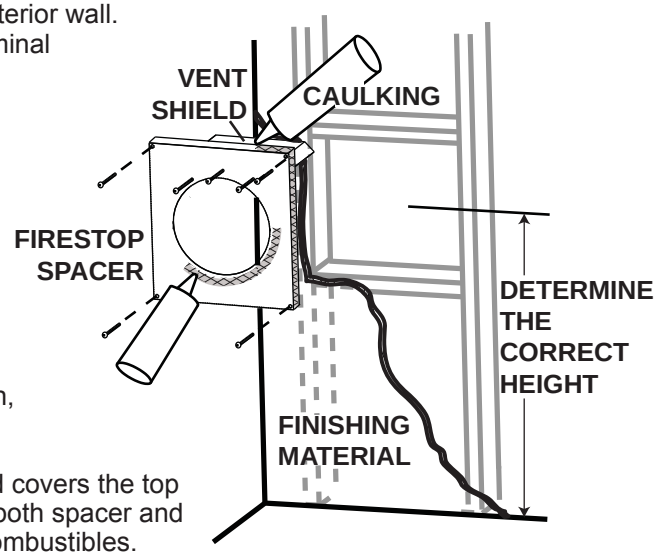

A. Assemble the shield to the spacer as shown, using the 3 shorter screws supplied.

B. Place the firestop top so that the vent shield covers the top of the vent within the opening. Ensure that both spacer and shield maintain the required clearance to combustibles.

C. Secure the spacer in place using the 4 longer screws supplied. Once the vent pipe is installed in its final position, apply sealant between the pipe and the firestop spacer.

20.5A

4.1.2 VERTICAL INSTALLATION

This application occurs when venting through a roof. Installation kits for various roof pitches are available from your authorized dealer / distributor. See accessories to order specific kits required.

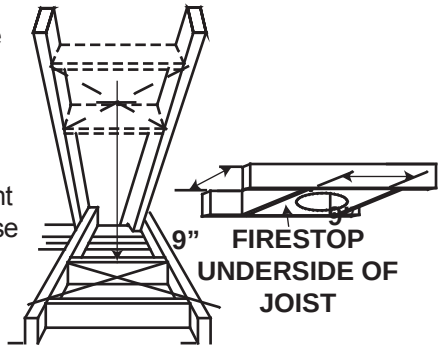

A. Determine the air terminal location, cut and frame a square opening as illustrated in the ceiling and the roof to provide the minimum 1“ clearance between the vent pipe and any combustible material. Try to center the vent pipe location midway between two joists to prevent having to cut them. Use a plumb bob to line up the center of the openings. A vent pipe shield will prevent any materials such as insulation, from filling up the 1” air space around the pipe. Nail headers between the joist for extra support.

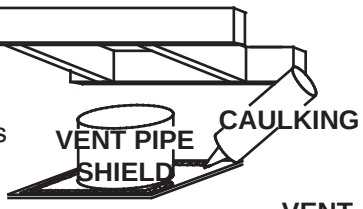

B. Apply a bead of caulking (not supplied) to the framework or to the Wolf Steel vent pipe shield plate or equivalent (in the case of a finished ceiling), and secure over the opening in the ceiling. A firestop must be placed on the bottom of each framed opening in a roof or ceiling that the venting system passes through. Apply a bead of caulking all around and place a firestop spacer over the vent shield to restrict cold air from being drawn into the room or around the fireplace. Ensure that both spacer and shield maintain the required clearance to combustibles. Once the vent pipe is installed in its final position, apply sealant between the pipe and the firestop assembly.

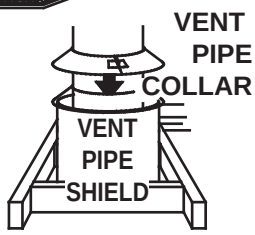

C. In the attic, slide the vent pipe collar down to cover up the open end of the shield and tighten. This will prevent any materials, such as insulation, from filling up the 1” air space around the pipe.

21.1

4.2 HORIZONTAL AIR TERMINAL INSTALLATION

⚠ WARNING

TERMINALS MUST NOT BE RECESSED INTO A WALL OR SIDING MORE THAN THE DEPTH OF THE RETURN FLANGE OF THE MOUNTING PLATE.

DO NOT ALLOW THE INNER FLEX PIPE TO BUNCH UP ON HORIZONTAL OR VERTICAL RUNS AND ELBOWS. KEEP IT PULLED TIGHT.

A. Stretch the inner flex pipe to the required length taking into account the additional length needed for the finished wall surface. Slip the vent pipe a minimum of 2” over the inner sleeve of the air terminal and secure with 3 #8 screws. Apply a heavy bead of the high temperature sealant W573-0007 Mill Pac (not supplied).

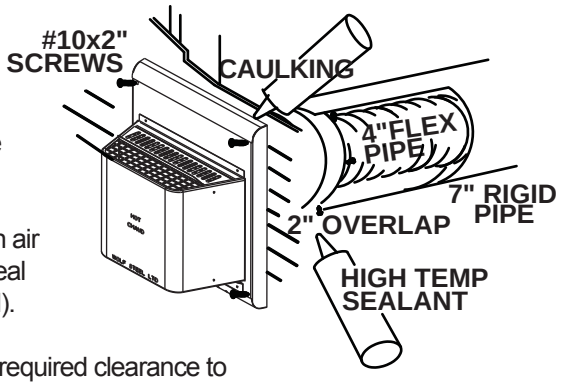

B. Using the outer rigid pipe, slide over the outer combustion air sleeve of the air terminal and secure with 3 #8 screws. Seal using high temperature sealant W573-0002 (not supplied).

C. Insert the vent pipes through the firestop maintaining the required clearance to combustibles. Holding the air terminal (lettering in an upright, readable position), secure to the exterior wall and make weather tight by sealing with caulking (not supplied).

D. From inside the house, using silicone, seal between the vent pipe and the firestop. Then slide the black trim collar over the vent pipe up to the firestop.

E. If more vent pipe needs to be used to reach the appliance, couple them together as illustrated. The vent system must be supported approximately every 3 feet for both vertical and horizontal runs. Use noncombustible strapping to maintain the minimum clearance to combustibles.

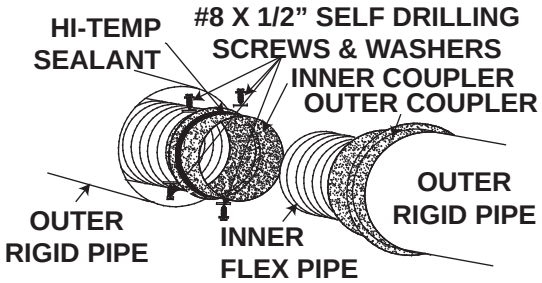

The air terminal mounting plate may be recessed into the exterior wall or siding no greater than the depth of its return flange.

23.7A

4.3 EXTENDED HORIZONTAL AND CORNER AIR TERMINAL INSTALLATION

A 45° corner installation can have 0” rise between the appliance combustion air collar and the air terminal. In this case, vent lengths must be kept to a maximum of 24”. For longer vent lengths, a minimum vertical rise of 24” is required.

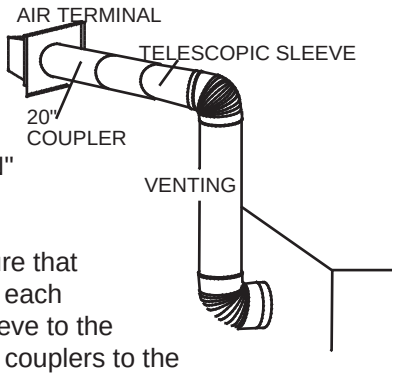

A. Follow the instructions for "HORIZONTAL AIR TERMINAL INSTALLATION" section.

B. Continue adding components alternating inner and outer vent pipes. Ensure that all inner vent pipes and elbows have sufficient vent spacers attached and each component is securely fastened to the one prior. Attach the telescopic sleeve to the vent run. Secure and seal. To facilitate completion, attach inner and outer couplers to the air terminal.

C. Install the air terminal. See “HORIZONTAL AIR TERMINAL INSTALLATION” section. Extend the outer telescopic sleeve; connect to the air terminal assembly. Fasten with self tapping screws and seal.

48.2

4.4 VERTICAL AIR TERMINAL INSTALLATION

⚠ WARNING

MAINTAIN A MINIMUM 2” SPACE BETWEEN THE AIR INLET BASE AND THE STORM COLLAR.

A. Fasten the roof support to the roof using the screws provided. The roof support is optional. In this case the venting is to be adequately supported using either an alternate method suitable to the authority having jurisdiction or the optional roof support.

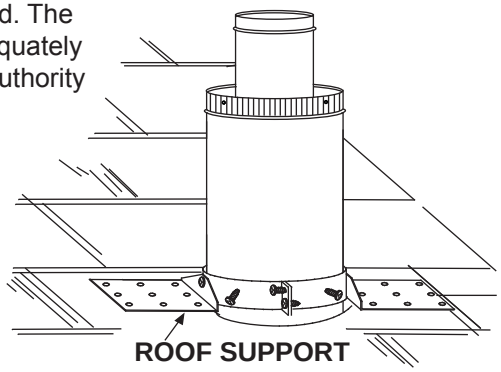

B. Stretch the inner flex pipe to the required length. Slip the inner flex pipe a minimum of 2” over the inner pipe of the air terminal connector and secure with 3 #8 screws. Seal using a heavy bead of high temperature sealant W573-0007 (not supplied).

C. Repeat using the outer flex pipe, using a heavy bead of high temperature sealant W573-0002 (not supplied).

D. Thread the air terminal connector / vent pipe assembly down through the roof. The air terminal must be positioned vertically and plumb. Attach the air terminal connector to the roof support, ensuring that the top of the air terminal is 16” above the highest point that it penetrates the roof.

E. Remove nails from the shingles, above and to the sides of the air terminal connector. Place the flashing over the air terminal connector leaving a min. 3/4” of the air terminal connector showing above the top of the flashing. Slide the flashing underneath the sides and upper edge of the shingles. Ensure that the air terminal connector is properly centred within the flashing, giving a 3/4” margin all around. Fasten to the roof. Do not nail through the lower portion of the flashing. Make weather-tight by sealing with caulking. Where possible, cover the sides and top edges of the flashing with roofing material.

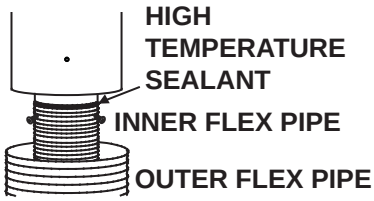

F. Aligning the seams of the terminal and air terminal connector, place the terminal over the air terminal connector making sure the vent pipe goes into the hole in the terminal. Secure with the three screws provided.

G. Apply a heavy bead of weatherproof caulking 2” above the flashing. Install the storm collar around the air terminal and slide down to the caulking. Tighten to ensure that a weather-tight seal between the air terminal and the collar is achieved.

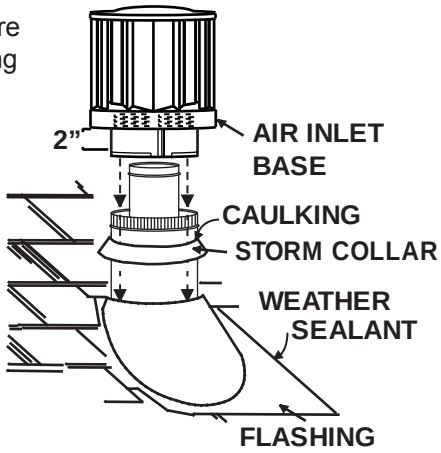

H. If more vent pipe needs to be used to reach the appliance see “HORIZONTAL AIR TERMINAL INSTALLATION” section.

24.1

4.5 APPLIANCE VENT CONNECTION

A. Attach the adjustable pipe to the last section of rigid pipe. Secure with screws and seal.

B. Install the inner flex pipe to the appliance. Secure with 3 screws and flat washers. Seal the joint and screw holes using the high temperature sealant W573-0007 (not supplied).

C. Run a bead of high temperature sealant (not supplied) around the inside of the air intake collar. Pull the adjustable pipe a minimum 2" into the air intake collar.

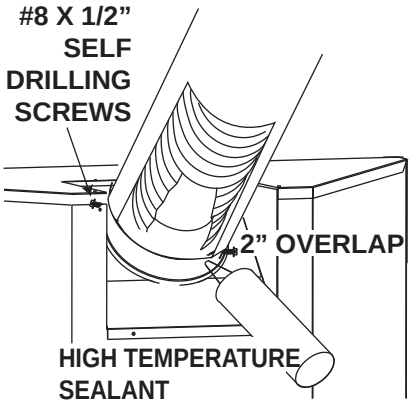

<u>NOTE:</u> Ensure that the sealant is not visible on the exterior pipes once installation is completed. An optional decorative black band is available for this use. In the event that the venting must be disassembled, care must be taken to reseal the venting.

28.5

4.6 GAS INSTALLATION

⚠ WARNING
RISK OF FIRE, EXPLOSION OR ASPHYXIATION. ENSURE THERE ARE NO IGNITION SOURCES SUCH AS SPARKS OR OPEN FLAMES.
SUPPORT GAS CONTROL WHEN ATTACHING GAS SUPPLY PIPE TO PREVENT DAMAGING GAS LINE.
ALWAYS LIGHT THE PILOT WHETHER FOR THE FIRST TIME OR IF THE GAS SUPPLY HAS RUN OUT WITH THE GLASS DOOR OPENED OR REMOVED. PURGING OF THE GAS SUPPLY LINE SHOULD BE PERFORMED BY A QUALIFIED SERVICE TECHNICIAN. ASSURE THAT A CONTINUOUS GAS FLOW IS AT THE BURNER BEFORE CLOSING THE DOOR. ENSURE ADEQUATE VENTILATION. FOR GAS AND ELECTRICAL LOCATIONS, SEE "DIMENSION" SECTION.
HIGH PRESSURE WILL DAMAGE VALVE. DISCONNECT GAS SUPPLY PIPING BEFORE TESTING GAS LINE AT TEST PRESSURES ABOVE 1/2 PSIG.
VALVE SETTINGS HAVE BEEN FACTORY SET, DO NOT CHANGE.

Installation and servicing to be done by a qualified installer. **Do not use open flame.**

A. Move the appliance into position and secure.

B. If equipped with a flex connector the appliance is designed to accept a 1/2" gas supply. Without the connector it is designed to accept a 3/8" gas supply. The appliance is equipped with a manual shut off valve to turn off the gas supply to the appliance.

C. Connect the gas supply in accordance to local codes. In the absence of local codes, install to the current CAN/CSA-B149.1 Installation Code in Canada or to the current National Fuel Gas Code, ANSI Z223.1 / NFPA 54 in the United States.

D. When flexing any gas line, support the gas valve so that the lines are not bent or kinked.

E. Check for gas leaks by brushing on a soap and water solution.

30.2

4.7 MOBILE HOME

This appliance is certified to be installed as an OEM (Original Equipment Manufacturer) installation in a manufactured home or mobile home and must be installed in accordance with the manufacturer's instructions and the Manufactured Home Construction and Safety Standard, Title 24 CFR, Part 3280, in the United States or the Mobile Home Standard, CAN/CSA Z240 MH Series, in Canada. This appliance is only for use with the type(s) of gas indicated on the rating plate. A conversion kit is supplied with the mobile home appliance.

This Mobile/Manufactured Home Listed appliance comes factory equipped with a means to secure the unit. Built in appliances are equipped with 1/4" diameter holes located in the front left and right corners of the base. Use #10 hex head screws, inserted through the holes in the base to secure. For free standing products contact your local authorized dealer / distributor for the appropriate securing kit. For mobile home installations, the appliance must be fastened in place. It is recommended that the appliance be secured in all installations. Always turn off the pilot and the fuel supply at the source, prior to moving the mobile home. After moving the mobile home and prior to lighting the appliance, ensure that the logs are positioned correctly.

This appliance is certified to be installed in an aftermarket permanently located, manufactured (mobile) home, where not prohibited by local codes.
This appliance is only for use with the type of gas indicated on the rating plate. This appliance is not convertible for use with other gases, unless a certified kit is used.

Conversion Kits
This appliance is field convertible between Natural Gas (NG) and Propane (LP).
To convert from one gas to another consult your Authorized dealer/distributor.

29.1

4.8 MINIMUM CLEARANCE TO COMBUSTIBLES

⚠ WARNING

MINIMUM CLEARANCE TO COMBUSTIBLES MUST BE MAINTAINED OR A SERIOUS FIRE HAZARD COULD RESULT.

FRAMING OR FINISHING MATERIAL CLOSER THAN THE MINIMUMS LISTED MUST BE CONSTRUCTED ENTIRELY OF NON-COMBUSTIBLE MATERIALS (I.E. STEEL STUDS, CEMENT BOARD, ETC.).

NEVER OBSTRUCT THE FRONT OPENING OF THE APPLIANCE.

As long as clearance to combustibles is kept within the required distances, the most desirable and beneficial location for a Napoleon® appliance is in the centre of a building, thereby allowing the most efficient use of the heat created. The location of windows, doors and the traffic flow in the room where the appliance is to be located should be considered. If possible, you should choose a location where the vent will pass through the house without cutting a floor or roof joist.

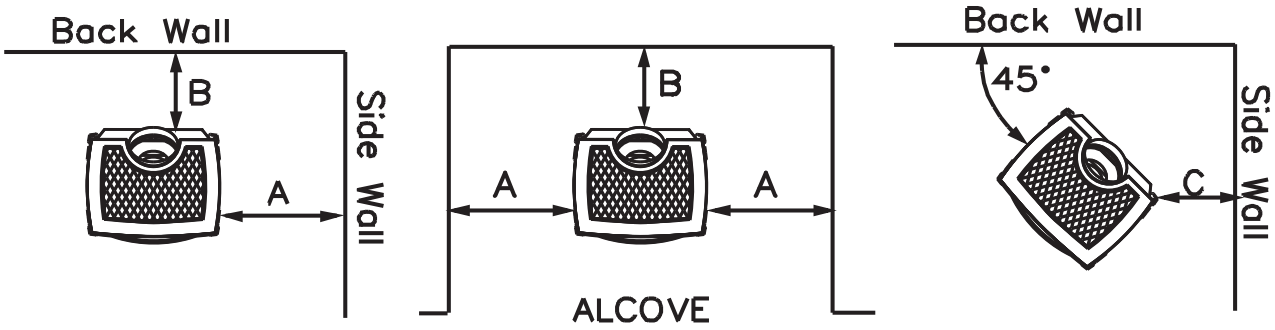

A.	4”	**B.**	2”*	**C.**	2”

To ceiling from appliance top	48”
Horizontal vent	
Sides and bottom	1”
Top	2”
Vertical vent	
All sides	1”

*At a distance of 2” from the wall, installation or service to the blower may not be practical. A minimum of 5” will be required in order to install the blower.

If less than 5” clearance is maintained between the back of the appliance and the back wall, it will be necessary to disconnect the venting and gas pipe to move the appliance out for installation or service of the blower.

4.9 MINIMUM MANTEL OR SHELF CLEARANCES

⚠ WARNING

RISK OF FIRE, MAINTAIN ALL SPECIFIED AIR SPACE CLEARANCES TO COMBUSTIBLES. FAILURE TO COMPLY WITH THESE INSTRUCTIONS MAY CAUSE A FIRE OR CAUSE THE APPLIANCE TO OVER-HEAT. ENSURE ALL CLEARANCES (I.E. BACK, SIDE, TOP, VENT, HEARTH, MANTEL, FRONT, ETC.) ARE CLEARLY MAINTAINED.

When the appliance is rear vented, a mantel or shelf may be installed above the GDS25 at a minimum distance of 8”.

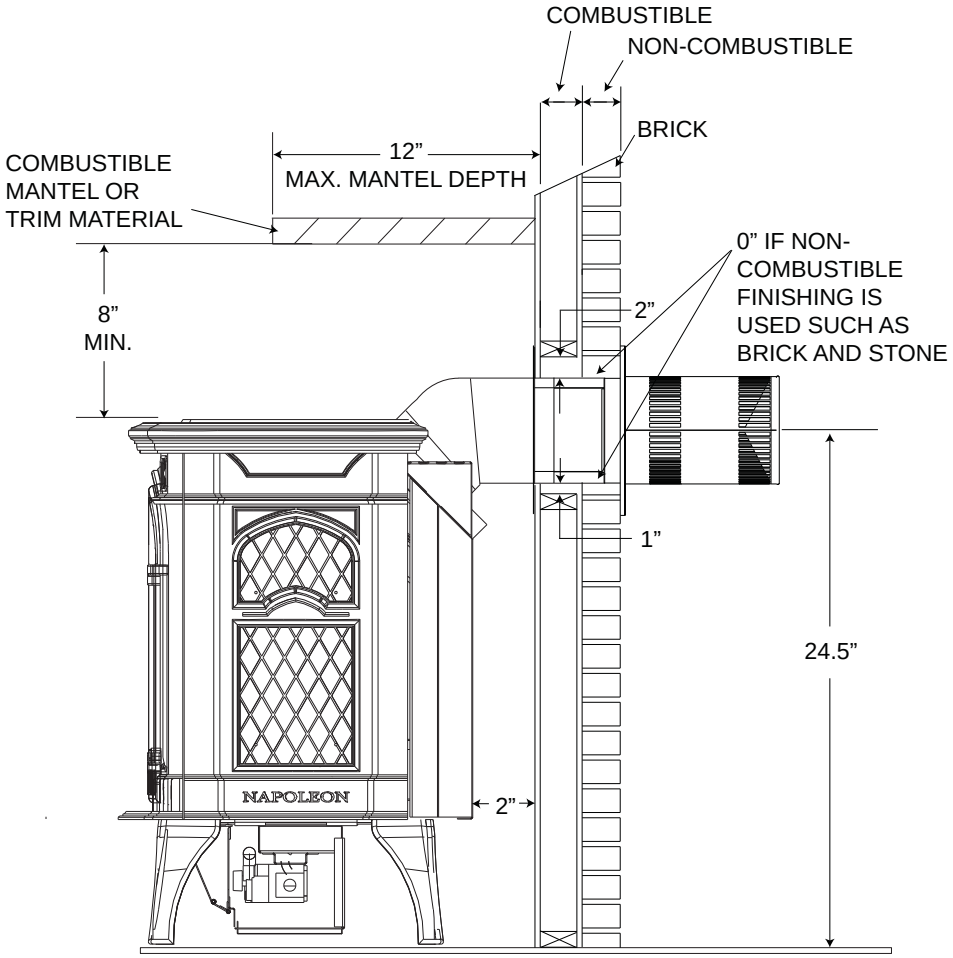

5.0 FINISHING

WARNING

RISK OF FIRE!

NEVER OBSTRUCT THE FRONT OPENING OF THE APPLIANCE.

DO NOT STRIKE, SLAM OR SCRATCH GLASS. DO NOT OPERATE APPLIANCE WITH GLASS REMOVED, CRACKED, BROKEN OR SCRATCHED.

72.4

5.1 CAST FRONT INSTALLATION AND REMOVAL

WARNING

GLASS MAY BE HOT, DO NOT TOUCH GLASS UNTIL COOLED.

A. Lift the top cast piece off of the appliance.

B. Detach the front cast piece from the side pieces by removing the screws from the brackets located in the upper inside corners.

C. Slide the front straight up to remove.

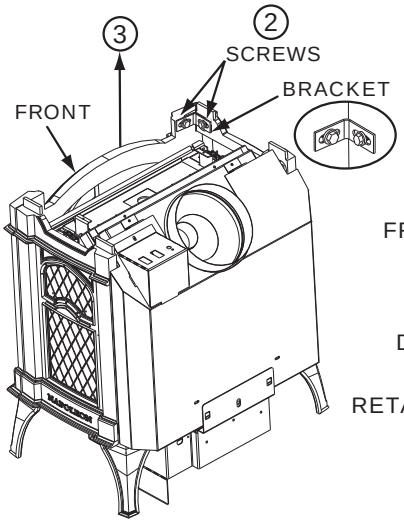

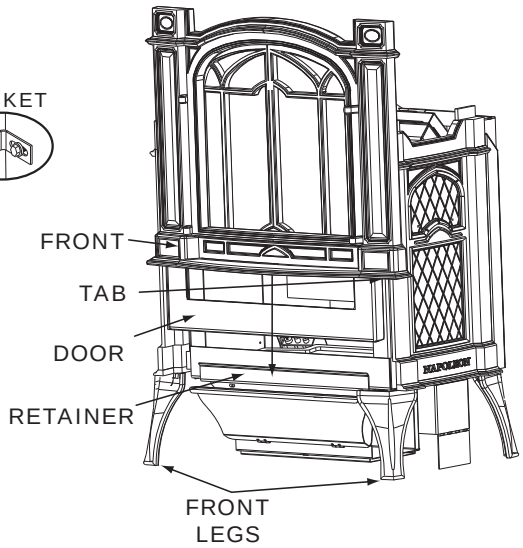

Follow the above steps in reverse in order to reinstall the cast front. Ensure that the tabs on the underside of the front fit behind the front legs.

<u>NOTE:</u> It is not necessary to remove the cast front, in order to remove the door.

5.2 GLASS DOOR INSTALLATION AND REMOVAL

WARNING

DO NOT USE SUBSTITUTE MATERIALS.

GLASS MAY BE HOT, DO NOT TOUCH GLASS UNTIL COOLED.

A. Lift the top cast piece off of the appliance.

B. Pull handle and rotate 90°.

C. Slide the door straight up to remove.

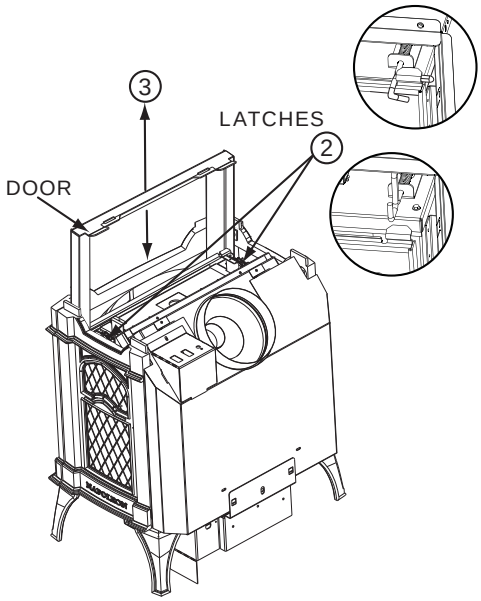

Follow the above steps in reverse in order to reinstall the door. Ensure that the bottom of the door meets the door retainer before closing the latches.

5.3 LOG PLACEMENT

⚠ WARNING

LOGS MUST BE PLACED IN THE EXACT LOCATION IN APPLIANCE. DO NOT CHANGE FROM THE PROPER LOG POSITIONS. APPLIANCE MAY NOT FUNCTION PROPERLY.

THE LOGS ARE FRAGILE AND SHOULD BE HANDLED WITH CARE.

It is not necessary to remove the cast front, however, this will make for a more simple log installation. In order to assemble the log set, the glass door must be removed, see “CAST FRONT / GLASS DOOR INSTALLATION AND REMOVAL” section.

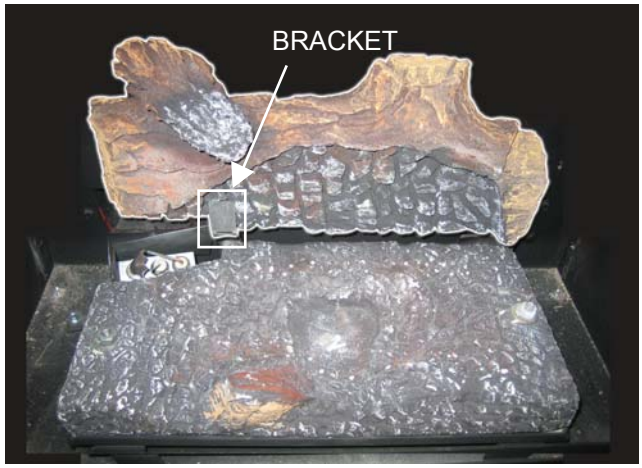

A. Place the rear log, as shown, onto the rear log support brackets. Ensure the cutout on the left underside of the log, fits over the pilot-assembly. Bend the bracket on the left side to help retain the rear log.

B. Place the hole in the underside of log #2 onto the locating screw, on the left side of the burner. The fibre burner is formed to cradle the centre of the log.

C. Place the hole in the underside of log #3 onto the locating screw, on the right side of the burner. The bottom branch of log #3 sits in front of, and against, the right end of log #2.

D. Reinstall the glass door & front.

5.4 SWITCH FUNCTIONS

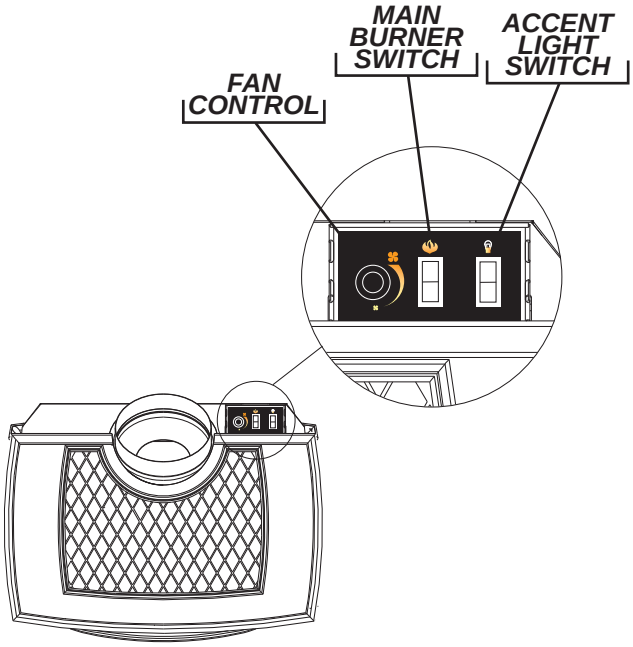

5.5 LOGO PLACEMENT

Remove the backing from the logo and position onto the control door as shown.

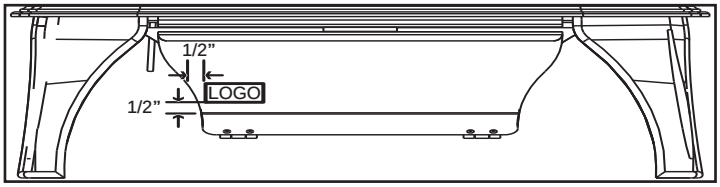

6.0 OPTIONAL BLOWER INSTALLATION

⚠ WARNING

RISK OF FIRE AND ELECTRICAL SHOCK.

TURN OFF THE GAS AND ELECTRICAL POWER BEFORE SERVICING THIS APPLIANCE.

USE ONLY WOLF STEEL APPROVED OPTIONAL ACCESSORIES AND REPLACEMENT PARTS WITH THIS APPLIANCE. USING NON-LISTED ACCESSORIES (BLOWERS, DOORS, LOUVRES, TRIMS, GAS COMPONENTS, VENTING COMPONENTS, ETC.) COULD RESULT IN A SAFETY HAZARD AND WILL VOID THE WARRANTY AND CERTIFICATION.

BLOWER

A. Cut and remove the tie securing the blower switch wires to the heat shield.

B. Connect the white wire coming from below the appliance to the terminal on the blower.

C. Connect the black blower wire to the black wire coming from below the appliance.

D. Insert the clips on the blower housing into the cutouts in the rear shield. Push down to lock the clips into position.

E. Secure the blower using the screw and lock washer supplied.

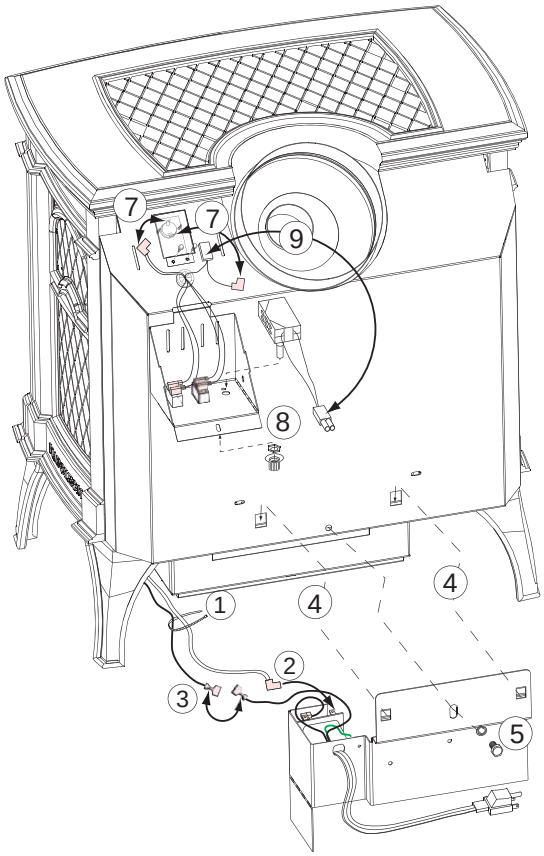

<u>NOTE:</u> Ensure that all the wires are tucked into the blower switch housing.

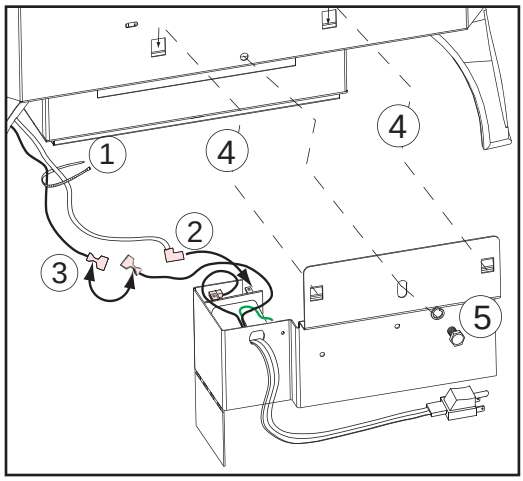

SWITCHES

F. Open the switch housing by removing the top screw.

G. Install the thermodisc bracket as shown, using 2 of the screws supplied. Connect the flagged leads to the terminals of the thermodisc.

Remove the knock out from the housing label.

H. Install the variable speed switch (rheostat) into the housing with the wires facing up. Secure the switch to the housing using the pal nut and the knob supplied.

I. Connect the male connector on the switch to the female connector coming from the appliance.

J. Tuck all of the wires into the housing and close. Secure using the screw removed in step F.

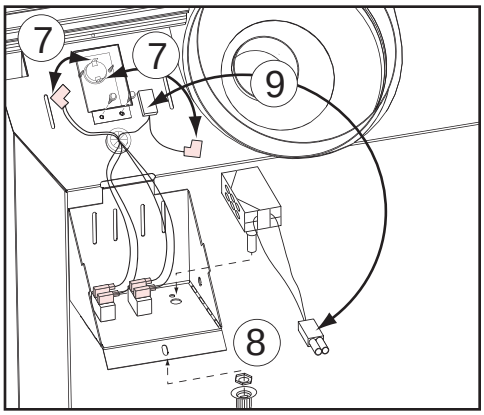

7.0 WIRING DIAGRAM

⚠ WARNING

ALWAYS LIGHT THE PILOT WHETHER FOR THE FIRST TIME OR IF THE GAS SUPPLY HAS RAN OUT WITH THE GLASS DOOR OPEN OR REMOVED.

The on/off switch is located on the back of the GDS25 at the top right corner. For ease of accessibility, an optional remote wall switch or millivolt thermostat may be installed in a convenient location.
The recommended maximum lead length depends on the wire size:

WIRE SIZE	MAX. LENGTH
14 gauge	100 feet
16 gauge	60 feet
18 gauge	40 feet

Route 2-strand (solid core) wire through to the wire harness located under the gas valve. Connect the wires from the wall switch/thermostat to the two brown wires extending from the ignition control box.

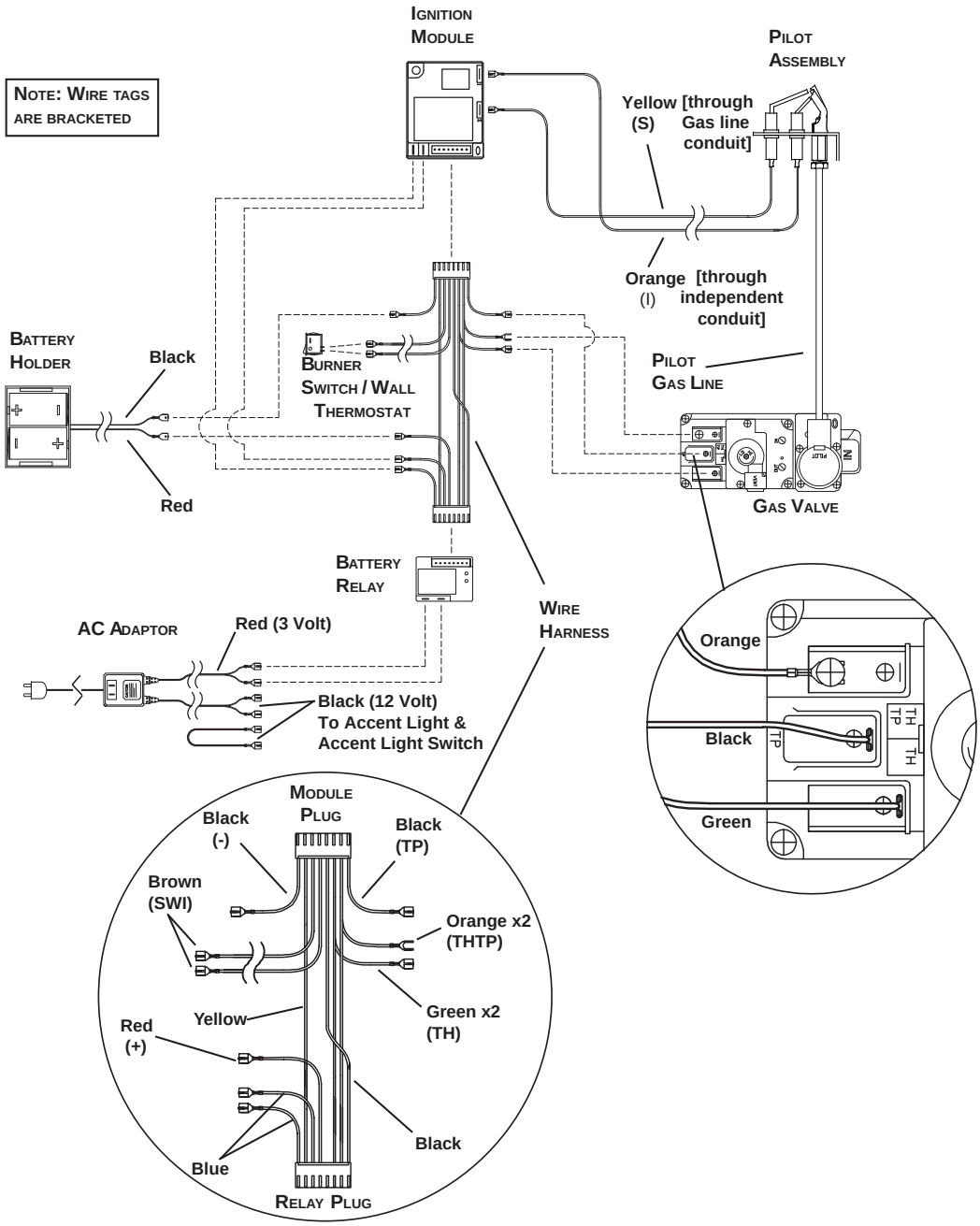

8.0 OPERATION

⚠ WARNING

IF YOU DO NOT FOLLOW THESE INSTRUCTIONS EXACTLY, A FIRE OR EXPLOSION MAY RESULT CAUSING PROPERTY DAMAGE, PERSONAL INJURY OR LOSS OF LIFE.

ALWAYS LIGHT THE PILOT WHETHER FOR THE FIRST TIME OR IF THE GAS SUPPLY HAS RUN OUT WITH THE GLASS DOOR OPENED OR REMOVED.

Ensure that a continuous gas flow is at the burner before installing the door. When lit for the first time, the appliance will emit an odor for a few hours. This is a normal temporary condition caused by the "burn-in" of paints and lubricants used in the manufacturing process and will not occur again. After extended periods of non-operation such as following a vacation or a warm weather season, the appliance may emit a slight odor for a few hours. This is caused by dust particles in the heat exchanger burning off. In both cases, open a window to sufficiently ventilate the room.

FOR YOUR SAFETY READ BEFORE LIGHTING:

A. This appliance is equipped with an ignition device which automatically lights he pilot. Do not try to light by hand.
B. Before operating smell all around the appliance area for gas and next to the floor because some gas is heavier than air and will settle on the floor.
C. Use only your hand to turn the gas control knob. Never use tools. If the knob will not turn by hand, do not try to repair it. Call a qualified service technician. Force or attempted repair may result in a fire or explosion.
D. Do not use this appliance if any part has been under water. Immediately call a qualified service technician to inspect the appliance and replace any part of the control system and any gas control which has been under water.

WHAT TO DO IF YOU SMELL GAS:

- Turn off all gas to the appliance.
- Open windows.
- Do not try to light any appliance.
- Do not touch any electric switch; do not use any phone in your building.
- Immediately call your gas supplier from a neighbor's phone. Follow the gas supplier's instructions.
- If you cannot reach your gas supplier, call the fire department.

LIGHTING INSTRUCTIONS:

1. Stop! Read the above safety information on this label.
2. Turn remote wall switch to off position.
3. Turn off all electrical power to the appliance and remove batteries.
4. This appliance is equipped with an ignition device which automatically lights the pilot. Do not try to light the pilot by hand.
5. Turn manual shutoff valve clockwise to off.
6. Open the glass door.
7. Wait five (5) minutes to clear out any gas. If you smell gas including near the floor, STOP! Follow “B” in the above safety information on this label. If you don’t smell gas go to the next step.
8. Close the glass door.
9. Turn manual shutoff valve counter-clockwise to on.
10. Turn on all electrical power to the appliance and re-install batteries.
11. Turn on remote wall switch to on position.
12. If appliance will not operate, follow instructions “TO TURN OFF GAS” and call your service technician or gas supplier.

Manual Shut-off Valve Shown in “OFF” position.

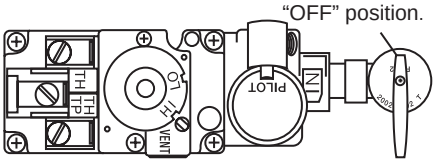

TO TURN OFF GAS

1. Turn off remote wall switch to the appliance.
2. Turn off all electrical power to the appliance if service is to be performed.
3. Turn manual shutoff valve clockwise to off. Do not force.

47.6

9.0 ADJUSTMENT

9.1 RESTRICTING VERTICAL VENTS

Vertical installations may display a very active flame. Loosen the two screws and slide the restrictor plate blocking the exhaust path. This reduces the velocity of the exhaust gases, slowing down the flame pattern and creating a more traditional flame appearance. For vertical vents greater than 15 feet, this restrictor must be fully closed.

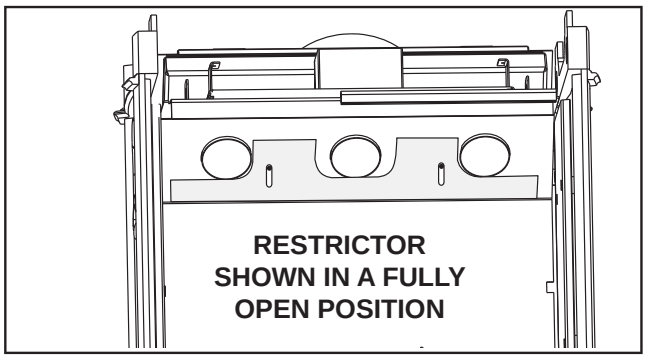

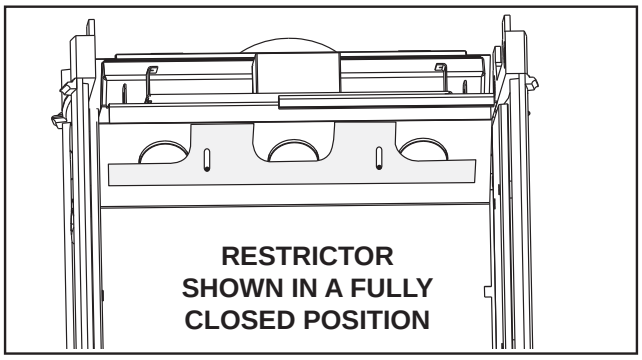

9.2 VENTURI ADJUSTMENT

This appliance has an air shutter that has been factory set open according to the chart below:

Regardless of venturi orientation, closing the air shutter will cause a more yellow flame, but can lead to carboning. Opening the air shutter will cause a more blue flame, but can cause flame lifting from the burner ports. The flame may not appear yellow immediately; allow 15 to 30 minutes for the final flame colour to be established.

AIR SHUTTER ADJUSTMENT MUST ONLY BE DONE BY A QUALIFIED INSTALLER!

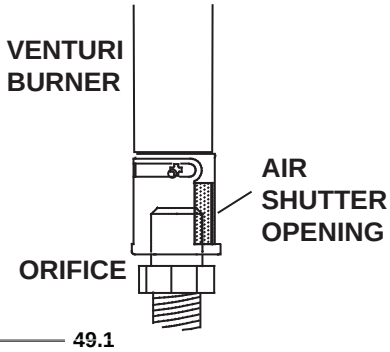

49.1

Remove the 2 screws securing the burner. Air shutters have been factory set open according to the Venturi Adjustment Chart. These settings are for (maximum) horizontal termination. Adjustment may be required depending on fuel type, vent configuration and altitude. After making adjustments replace the burner ensuring that the venturi tube fits over the orifice and replace the screws.

VENTURI ADJUSTMENT CHART	
FUEL	**GDS25**
NG	5/16”
LP	7/16”

9.3 FLAME CHARACTERISTICS

It’s important to periodically perform a visual check of the pilot and burner flames. Compare them to the illustrations provided. If any flames appear abnormal call a service person.

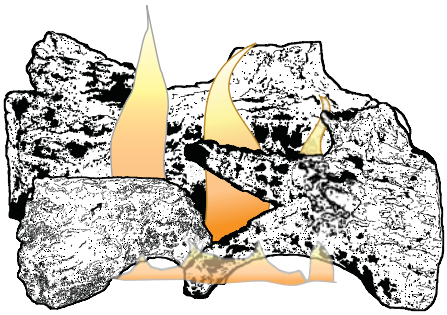

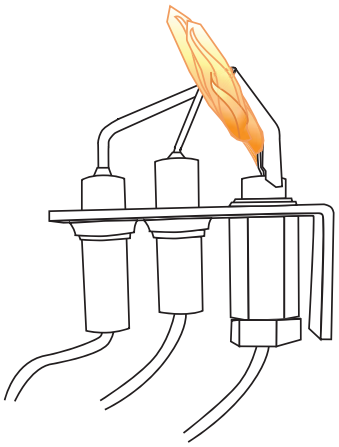

54.3

10.0 MAINTENANCE

⚠ WARNING
TURN OFF THE GAS AND ELECTRICAL POWER BEFORE SERVICING THE APPLIANCE.
APPLIANCE MAY BE HOT, DO NOT SERVICE UNTIL APPLIANCE HAS COOLED.
DO NOT USE ABRASIVE CLEANERS.

CAUTION: Label all wires prior to disconnection when servicing controls. Wiring errors can cause improper and dangerous operation. Verify proper operation after servicing. This appliance and its venting system should be inspected before use and at least annually by a qualified service person. The appliance area must be kept clear and free of combustible materials, gasoline or other flammable vapors and liquids. The flow of combustion and ventilation air must not be obstructed.

1. In order to properly clean the burner and pilot assembly, remove the logs, rocks and/or glass to expose both assemblies.
2. Keep the control compartment, media, burner, air shutter opening and the area surrounding the logs clean by vacuuming or brushing, at least once a year.
3. Check to see that all burner ports are burning. Clean out any of the ports which may not be burning or are not burning properly.
4. Check to see that the pilot flame is large enough to engulf the flame sensor and/or thermocouple / thermopile as well as reaches the burner.
5. Replace the cleaned logs, rocks or glass. Failure to properly position the media may cause carboning which can be distributed in the surrounding living area.
6. Check to see that the main burner ignites completely on all openings when turned on. A 5 to 10 second total light-up period is satisfactory. If ignition takes longer, consult your local authorized dealer / distributor.
7. Check that the gasketing on the sides, top and bottom of the door is not broken or missing. Replace if necessary.
8. If for any reason the vent air intake system is disassembled, re-install and re-seal per the instructions provided for the initial installation.

40.1

10.1 NIGHT LIGHT REPLACEMENT

This appliance comes equipped with our “Night Light”.
If in the event the lamp or lens needs to be replaced, follow these instructions. Disconnect the two wire leads at the wire nut. Remove the four screws securing the accent light assembly from the relief door. Disassemble the light and the lamp now can be accessed

<u>Note:</u> Do not handle the lamp (bulb) with bare fingers, protect with a clean dry cloth.

The lamp will pull straight out of the socket. Replace with Wolf Steel parts only, as lamp and lens are special “high temperature” products. When re-installing, ensure integrity of gasket seal.

THE FIREBOX MUST BE SEALED.

When re-assembling the light assembly, care must be taken with all gaskets.

“Light Leakage” from above the cast doors may be noticed. The holes in the lamp housing are necessary for ventilation and must not be covered.

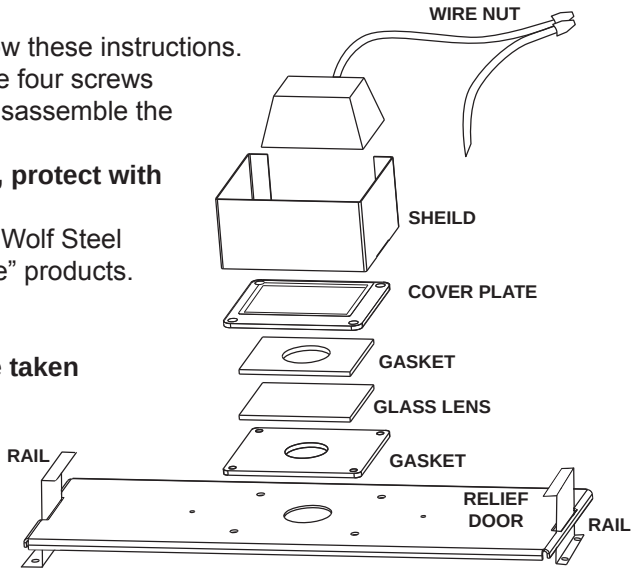

10.2 PILOT INJECTOR AND ORIFICE REPLACEMENT

⚠ WARNING

ALWAYS LIGHT THE PILOT WHETHER FOR THE FIRST TIME OR IF THE GAS SUPPLY HAS RAN OUT WITH THE GLASS DOOR OPEN OR REMOVED.

This must be carried out by an AUTHORIZED REPRESENTATIVE OF WOLF STEEL LTD. or a QUALIFIED GAS INSTALLER in accordance with local codes or in the absence of local codes with the requirements of the provincial / state authorities having jurisdiction and in accordance with the requirements of the CAN1-B149 Installation Code in Canada and the ANSI Z223.1 National Fuel Gas Code in the United States.

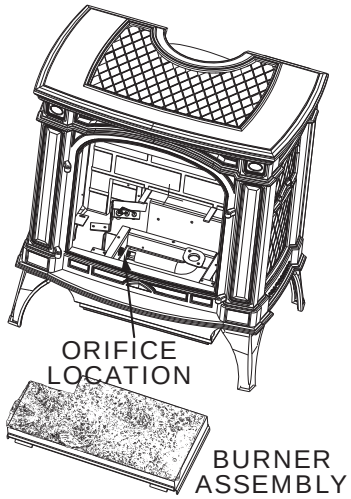

A. Turn off the electrical and gas supply to the appliance.

B. Remove the cast front, glass viewing door and log set.

C. Remove the 2 securing screws. Slide the burner assembly to the right and lift out.

D. Using a deep socket wrench, remove the main burner orifice. A back-up wrench must be used on themanifold, located below the housing to ensure that the aluminum tubing does not twist or kink. Replace the correct burner orifice using pipe thread compound.

E. Loosen nut and replace with appropriate injector

F. Reinstall the burner ensuring that the Venturi tube fits over the orifice.

G. Turn on the gas supply and check for gas leaks by brushing on a soap and water solution. **Do not use open flame.**

H. Replace the log set. Then light the pilot and main burner to ensure that the gas lines have been purged.

I. Replace the glass viewing door and cast front. Turn on the electrical supply to the appliance.

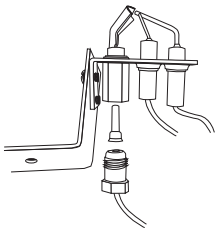

10.3 CARE OF GLASS

DO NOT CLEAN GLASS WHEN HOT! DO NOT USE ABRASIVE CLEANERS TO CLEAN GLASS.

Buff lightly with a clean dry soft cloth. Clean both sides of the glass after the first 10 hours of operation with a recommended fireplace glass cleaner. Thereafter clean as required. If the glass is not kept clean permanent discoloration and / or blemishes may result.

⚠ WARNING

HOT GLASS WILL CAUSE BURNS.

DO NOT TOUCH GLASS UNTIL COOLED.

NEVER ALLOW CHILDREN TO TOUCH GLASS.

5.1

10.4 CARE OF PLATED PARTS

If the appliance is equipped with plated parts, you must clean fingerprints or other marks from the plated surfaces before operating the appliance for the first time. Use a glass cleaner or vinegar and towel to clean. If not cleaned properly before operating for the first time, the marks can cause permanent blemishes on the plating. After the plating is cured, the fingerprints and oils will not affect the finish and little maintenance is required, just wipe clean as needed. Prolonged high temperature burning with the door ajar may cause discolouration on plated parts.

NOTE: The protective wrap on plated parts is best removed when the assembly is at room temperature but this can be improved if the assembly is warmed, using a hair dryer or similar heat source.

6.1

11.0 REPLACEMENT PARTS

Contact your dealer or the factory for questions concerning prices and policies on replacement parts. Normally all parts can be ordered through your Authorized dealer / distributor.

FOR WARRANTY REPLACEMENT PARTS, A PHOTOCOPY OF THE ORIGINAL INVOICE WILL BE REQUIRED TO HONOUR THE CLAIM.

When ordering replacement parts always give the following information:

- Model & Serial Number of appliance
- Installation date of appliance
- Part number
- Description of part
- Finish

*** IDENTIFIES ITEMS WHICH ARE NOT ILLUSTRATED. FOR FURTHER INFORMATION, CONTACT YOUR AUTHORIZED DEALER.**

WARNING

FAILURE TO POSITION THE PARTS IN ACCORDANCE WITH THIS MANUAL OR FAILURE TO USE ONLY PARTS SPECIFICALLY APPROVED WITH THIS APPLIANCE MAY RESULT IN PROPERTY DAMAGE OR PERSONAL INJURY.

41.1

COMPONENTS		
REF	**PART NO.**	**DESCRIPTION**
1	W135-0254	LOG #1 - REAR
2	W135-0249	LOG #2 - LEFT
3	W135-0250	LOG #3 - RIGHT
4	GL-651	LOG SET
5	W725-0032	DEXEN VALVE - NG
5	W725-0049	DEXEN VALVE - LP
6	W100-0086	BURNER
7	W456-0042	#42 BURNER ORIFICE - NG
7	W456-0054	#54 BURNER ORIFICE - LP
7	W456-0044	#44 BURNER ORIFICE - NG-HA
7	W456-0055	#55 BURNER ORIFICE - LP-HA
8*	W455-0049	PILOT INJECTOR - LP
9*	W455-0071	PILOT INJECTOR - NG
10*	W720-0092	PILOT TUBE
11	W100-0069	PILOT ASSEMBLY - NG
11	W100-0093	PILOT ASSEMBLY - LP
12*	W385-0334	NAPOLEON LOGO
13*	W660-0009	ON/OFF SWITCH
14*	W387-0006	HALOGEN BULB 10W T320
15*	W290-0108	TOP LENS GASKET
16*	W290-0109	BOTTOM LENS GASKET
17*	N402-0001	HIGH TEMPERATURE LIGHT ASSEMBLY
18	W135-0256**	FRONT CAST
19	W135-0232**	SIDE (LEFT OR RIGHT) CAST
20	W135-0257**	TOP CAST
21	W135-0258**	DOOR RIGHT CAST
22	W135-0259**	DOOR LEFT CAST
23	W010-1446	GLASS w/ GASKET
24	W430-0013	CONTROL DOOR MAGNET
25*	W010-1408	CONTROL COVER
26*	W010-2033	RIGHT LATCH ASSEMBLY
27*	W010-2034	LEFT LATCH ASSEMBLY

TERMINAL KITS		
REF	**PART NO.**	**DESCRIPTION**
30*	**GD-175**	**WALL TERMINAL KIT**
31	BM6790	90° ELBOW - 7” DIAMETER
32	GD-222	TERMINAL ASSEMBLY
33	BM67ADJ	30” TO 53” ADJUSTABLE PIPE - 7” DIA
34	W010-1313	FIRESTOP SPACER
35	W585-0267	TOP VENT SHIELD
36*	W020-0032	HARDWARE
37	BM3730	BLACK TRIM COLLAR
38	BM6724	24” APPLIANCE PIPE - 7” DIA
39	W010-0300	10’ ALUMINUM FLEX LINER c/w spacers - 4” DIA
40*	W025-0003	DECORATIVE BLACK BAND
41	**GD-180**	**PERISCOPE TERMINAL KIT**
31	BM6790	90° ELBOW - 7” DIAMETER
42*	GD-201	PERISCOPE
33	BM67ADJ	30” TO 53” ADJUSTABLE PIPE - 7” DIA
34	W010-1313	FIRESTOP SPACER
35	W585-0267	TOP VENT SHIELD
36*	W020-0032	HARDWARE
37	BM3730	BLACK TRIM COLLAR
38	BM6724	24” APPLIANCE PIPE - 7” DIA
39	W010-0300	10’ ALUMINUM FLEX LINER c/w spacers - 4” DIA
43*	**GD-176**	**WALL TERMINAL KIT**
32	GD-222	TERMINAL ASSEMBLY
37	BM3730	BLACK TRIM COLLAR
38	BM6724	24” APPLIANCE PIPE - 7” DIAMETER
40*	W025-0003	DECORATIVE BLACK BAND
44	BM6745	45° ELBOW
45*	W410-0027	2 PLY FLEX ALUMINIUM LINER - 4” X 32.5”
34	W010-1313	FIRESTOP SPACER
35	W585-0267	TOP VENT SHIELD

ROOF TERMINAL KITS		
REF	**PART NO.**	**DESCRIPTION**
GD-110 - 1/12 TO 7/12 PITCH		
46	W670-0006	AIR TERMINAL
47	W490-0073	4/7 INNER / OUTER SLEEVE
48	W010-0567	ROOF SUPPORT
49	W170-0063	STORM COLLAR
50	W263-0054	ROOF FLASHING
GD-111 - 8/12 TO 12/12 PITCH		
46	W670-0006	AIR TERMINAL
47	W490-0073	4/7 INNER / OUTER SLEEVE
48	W010-0567	ROOF SUPPORT
49	W170-0063	STORM COLLAR
51	W263-0055	ROOF FLASHING
GD-112 - FLAT ROOF		
46	W670-0006	AIR TERMINAL
47	W490-0073	4/7 INNER / OUTER SLEEVE
48	W010-0567	ROOF SUPPORT
49	W170-0063	STORM COLLAR
52	W263-0056	ROOF FLASHING

ACCESSORIES		
REF	**PART NO.**	**DESCRIPTION**
53*	W660-0081	MILLIVOLT THERMOSTAT
54*	F50	THERMOSTATIC REMOTE
55	GS-65KT	BLOWER KIT
56*	GDSLL-KT	LEG LEVELLING / SECURING
57*	W175-0244	CONVERSION NG - NG HA
57*	W175-0245	CONVERSION LP - LP HA
58*	W175-0246	CONVERSION NG - LP
58*	W175-0247	CONVERSION LP - NG
59	GD-301	HEAT GUARD
60*	W175-0001	4” COUPLER
61*	GS-331S	SOAPSTONE INSET, LORENA SLATE
61*	GS-331F	GRANITE INSET, UBATUBA GREEN
61*	GS-331N	GRANITE INSET, GIALLO GOLDEN BROWN

** For other available colours, add these letters to the base part number:

Colour	**Finish**
Summer Moss - M	Porcelain
Majolica Brown - N	Porcelain
Winter Frost - W	Porcelain

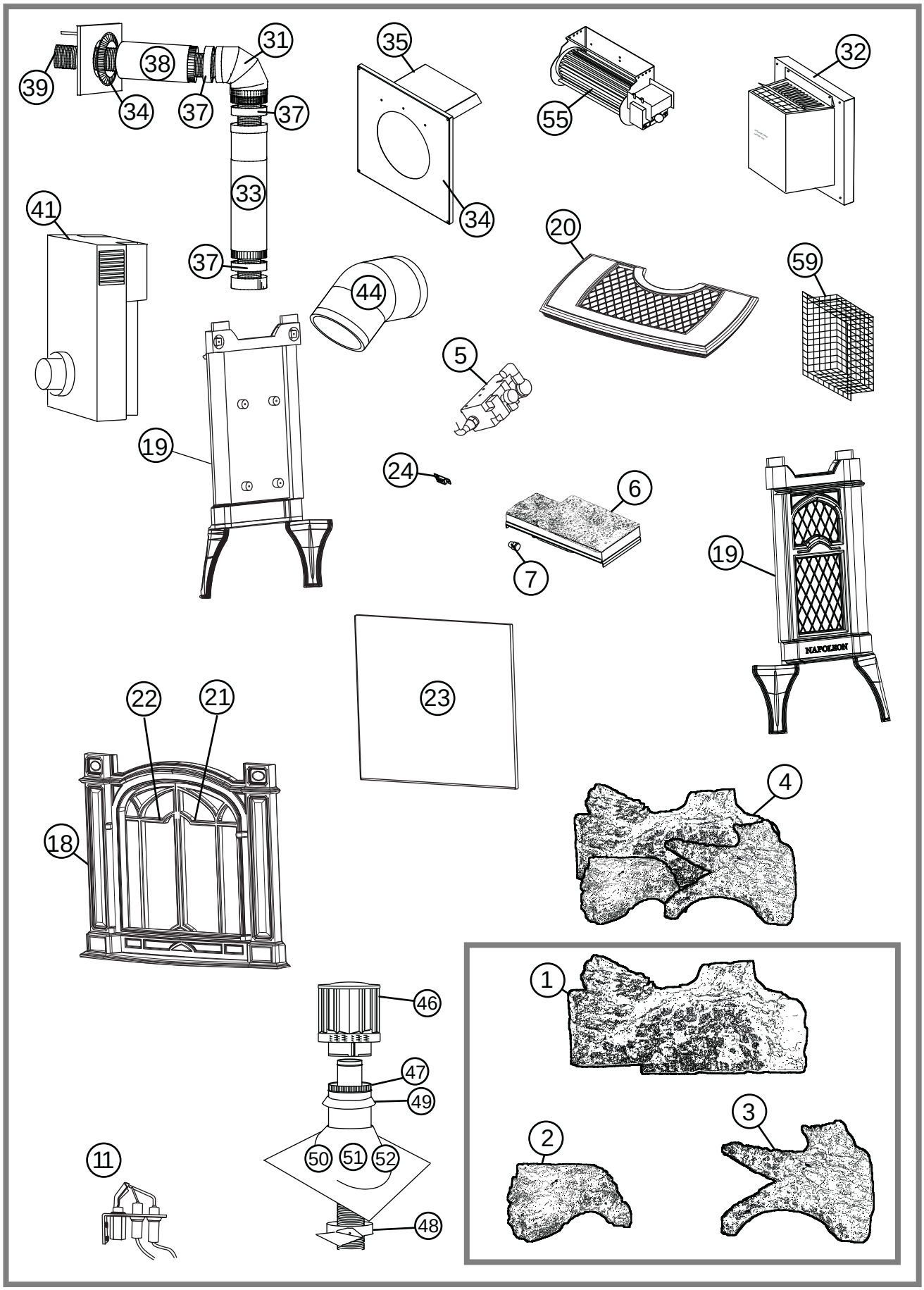
39
38
31
34
37
37
33
37
35
34
55
32
41
20
59
44
5
19
24
6
7
19
NAPOLEON
23
22
21
18
4
46
47
49
50
51
52
48
11
1
2
3

12.0 TROUBLESHOOTING

⚠ WARNING

ALWAYS LIGHT THE PILOT WHETHER FOR THE FIRST TIME OR IF THE GAS SUPPLY HAS RAN OUT, WITH THE GLASS DOOR OPEN OR REMOVED.

TURN OFF THE GAS AND ELECTRICAL POWER BEFORE SERVICING THE APPLIANCE.

APPLIANCE MAY BE HOT, DO NOT SERVICE UNTIL APPLIANCE HAS COOLED.

DO NOT USE ABRASIVE CLEANERS.

SYMPTOM	PROBLEM	TEST SOLUTION
Pilot will not light. Makes noise with no spark at pilot burner. 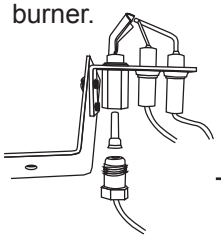	Wiring.	- Verify the “S” wire for the sensor and the “I” wire for the ignitor are connected to the terminals on the module and pilot assembly.
	Loose connection.	- Verify no loose connections, electrical shorts in the wiring or ground out to any metal object.
	Module.	- Turn the ON/OFF switch to the “OFF” position. Remove the igniter wire “I” from the module. Place the ON/OFF switch to the “ON” position. Hold a grounded wire about 3/16” away from the “I” terminal on the module. If no spark, the module must be replaced. If there is a spark, the module is fine. Inspect pilot assembly for a shorted wire or cracked insulator around the electrode.
	Igniter Spark gap is incorrect.	- Spark gap of the ignitor to the pilot should be .12” or 1/8”
	Transformer.	- Verify the transformer is installed and plugged into the relay box. Check voltage of the transformer under load at the spade connections on the relay box with the ON/OFF switch in the “ON” position. Acceptable readings of a good transformer are between 2.8 and 3.4 volts A.C.
	A shorted or loose Connection.	- Remove and reinstall the wiring harness that plugs into the module. Remove and verify continuity of each wire in wiring harness.
	Battery backup	- Check batteries.
	Improper switch wiring.	- Troubleshoot the system with the simplest ON/OFF switch.
Pilot sparks but will not light.	Gas supply.	- Verify that the incoming gas line ball valve is “Open”. Verify that the inlet pressure reading is within acceptable limits, inlet pressures must not exceed 13” W.C. (7” W.C. for NG and 13” W.C. for LP).
	Out of propane gas.	- Fill the tank.
Carbon is being deposited on glass, logs, rocks, media or combustion chamber surfaces.	Air shutter has become blocked.	- Ensure air shutter opening is free of lint or other obstructions. - Ensure air shutter is properly set.
	Flame is impinging on the glass, logs, rocks, media or combustion chamber.	- Check that the glass, logs, rocks or media are correctly positioned. - Open air shutter to increase the primary air. - Check the input rate: check the manifold pressure and orifice size as specified by the rating plate. - Check that the door gasketing is not broken or missing and that the seal is tight. - Check that both vent liners are free of holes and well sealed at all joints. - Check that minimum rise per foot has been adhered to for any horizontal venting.

42.13A

SYMPTOM	PROBLEM	TEST SOLUTION
Continues to spark and pilot lights, but main burner will not light.	Short or loose connection in sensor rod.	- Verify all connections. Verify the connections from the pilot assembly are tight; also verify these connections are not grounding out to any metal. - Verify the TH wires are connected to the valve.
	THTP	- Verify the THTP wires are connected to the valve.
	Poor flame rectification or contaminated sensor rod.	- Verify the flame is engulfing the sensor rod. This will increase the flame rectification. Verify correct pilot orifice is installed and inlet gas specifications to manual. (Remember, the flame carries the rectification current, not the gas. If the flame lifts from the pilot hood, the circuit is broken. A wrong orifice or too high of an inlet pressure can cause the pilot flame to lift). The sensor rod may need cleaning.
Pilot light stops sparking / pilot remains lit but burner will not turn on.	Wiring / connection.	- Inspect all wires, ensure good tight connections. Verify that all wiring is installed exactly as specified.
	Wiring harness.	- Inspect the wiring harness and verify the harness is tightly connected to the module. Verify that you have all wires connected and in the right order.
	Module or valve.	- Conduct the following test to verify if the problem is the module or valve. To measure voltages, turn the multimeter to “DC”, place the red lead from the multimeter to the screw on the terminal block for the wire you are checking, touch black lead to ground (valve body). Importantly, a “zero” volts reading does not automatically indicate a bad module, there may be too little resistance in the valve solenoid. Check if the green wires is disconnected from the valve. The voltage output from the module should be between 1.5 and 3 volts.
Exhaust fumes smelled in room, headaches.	Appliance is spilling.	- Check all seals.
Flames are very aggressive.	Door is ajar.	- Ensure door is secured properly.
	Venting action is too great.	- Check to ensure venting is properly sealed or restrict vent exit with restrictor plate. Restrictor plate not available in some models.
Main burner flame is a blue, lazy, transparent flame.	Blockage in vent.	- Remove blockage. In really cold conditions, ice buildup may occur on the terminal and should be removed as required. To minimize this from happening again, it is recommended that the vent lengths that pass through unheated spaces (attics, garages, crawl spaces) be wrapped with an insulated mylar sleeve. Prevent sleeve from sagging. Contact your local authorized dealer for more information.
White / grey film forms.	Sulphur from fuel is being deposited on glass, logs or combustion chamber surfaces.	- Clean the glass with a recommended appliance glass cleaner. **DO NOT CLEAN GLASS WHEN HOT!** If deposits are not cleaned off regularly, the glass may become permanently market.

DRAFT

Obadiah's · 406-300-1776

13.0 WARRANTY

NAPOLEON® products are manufactured under the strict Standard of the world recognized ISO 9001 : 2008 Quality Assurance Certificate.

NAPOLEON® products are designed with superior components and materials assembled by trained craftsmen who take great pride in their work. The burner and valve assembly are leak and test-fired at a quality test station. The complete appliance is again thoroughly inspected by a qualified technician before packaging to ensure that you, the customer, receives the quality product that you expect from NAPOLEON®.

NAPOLEON® GAS APPLIANCE PRESIDENT'S LIFETIME LIMITED WARRANTY

The following materials and workmanship in your new NAPOLEON® gas appliance are warranted against defects for as long as you own the appliance. This covers: combustion chamber, heat exchanger, stainless steel burner, phazer™ logs and embers, rocks, ceramic glass (thermal breakage only), gold plated parts against tarnishing, porcelainized enameled components and aluminum extrusion trims.*

Electrical (110V and millivolt) components and wearable parts such as blowers, gas valves, thermal switch, switches, wiring, remote controls, ignitor, gasketing, and pilot assembly are covered and NAPOLEON® will provide replacement parts free of charge during the first year of the limited warranty.*

Labour related to warranty repair is covered free of charge during the first year. Repair work, however, requires the prior approval of an authorized company official. Labour costs to the account of NAPOLEON® are based on a predetermined rate schedule and any repair work must be done through an authorized NAPOLEON® dealer.

* Construction of models vary. Warranty applies only to components included with your specific appliance.

CONDITIONS AND LIMITATIONS

NAPOLEON® warrants its products against manufacturing defects to the original purchaser only. Registering your warranty is not necessary. Simply provide your proof of purchase along with the model and serial number to make a warranty claim. NAPOLEON® reserves the right to have its representative inspect any product or part thereof prior to honouring any warranty claim. Provided that the purchase was made through an authorized NAPOLEON® dealer your appliance is subject to the following conditions and limitations:

Warranty coverage begins on the date of original installation.

This factory warranty is non-transferable and may not be extended whatsoever by any of our representatives.

The gas appliance must be installed by a licensed, authorized service technician or contractor. Installation must be done in accordance with the installation instructions included with the product and all local and national building and fire codes.

This limited warranty does not cover damages caused by misuse, lack of maintenance, accident, alterations, abuse or neglect and parts installed from other manufacturers will nullify this warranty.

This limited warranty further does not cover any scratches, dents, corrosion or discoloring caused by excessive heat, abrasive and chemical cleaners nor chipping on porcelain enamel parts, mechanical breakage of PHAZER™ logs and embers.

This warranty extends to the repair or replacement of warranted parts which are defective in material or workmanship provided that the product has been operated in accordance with the operation instructions and under normal conditions.

After the first year, with respect to this President's Lifetime Limited Warranty, NAPOLEON® may, at its discretion, fully discharge all obligations with respect to this warranty by refunding to the original warranted purchaser the wholesale price of any warranted but defective part(s).

NAPOLEON® will not be responsible for installation, labour or any other expenses related to the reinstallation of a warranted part and such expenses are not covered by this warranty.

Notwithstanding any provisions contained in the President's Lifetime Limited Warranty, NAPOLEON'S responsibility under this warranty is defined as above and it shall not in any event extend to any incidental, consequential or indirect damages.

This warranty defines the obligations and liability of NAPOLEON® with respect to the NAPOLEON® gas appliance and any other warranties expressed or implied with respect to this product, its components or accessories are excluded.

NAPOLEON® neither assumes, nor authorizes any third party to assume, on its behalf, any other liabilities with respect to the sale of this product.

NAPOLEON® will not be responsible for: over-firing, downdrafts, spillage caused by environmental conditions such as rooftops, buildings, nearby trees, hills, mountains, inadequate vents or ventilation, excessive venting configurations, insufficient makeup air, or negative air pressures which may or may not be caused by mechanical systems such as exhaust fans, furnaces, clothes dryers, etc.

Any damages to the appliance, combustion chamber, heat exchanger, plated trim or other components due to water, weather damage, long periods of dampness, condensation, damaging chemicals or cleaners will not be the responsibility of NAPOLEON®.

All parts replaced under the President's Limited Lifetime Warranty Policy are subject to a single claim.

During the first 10 years NAPOLEON® will replace or repair the defective parts covered by the lifetime warranty at our discretion free of charge. From 10 years to life, NAPOLEON® will provide replacement parts at 50% of the current retail price.

All parts replaced under the warranty will be covered for a period of 90 days from the date of their installation.

The manufacturer may require that defective parts or products be returned or that digital pictures be provided to support the claim. Returned products are to be shipped prepaid to the manufacturer for investigation. If a product is found to be defective, the manufacturer will repair or replace such defect.

Before shipping your appliance or defective components, your dealer must obtain an authorization number. Any merchandise shipped without authorization will be refused and returned to sender.

Shipping costs are not covered under this warranty.

Additional service fees may apply if you are seeking warranty service from a dealer.

Warranty labour allowance is only for the replacement of the warranted part. Travel, diagnostic tests, shipping and other related charges are not covered by this warranty.

ALL SPECIFICATIONS AND DESIGNS ARE SUBJECT TO CHANGE WITHOUT PRIOR NOTICE DUE TO ON-GOING PRODUCT IMPROVEMENTS. NAPOLEON® IS A REGISTERED TRADEMARK OF WOLF STEEL LTD.

Obadiah's · 406-300-1776

14.0 SERVICE HISTORY

Appliance Service History

This heater must be serviced annually depending on usage.

Date	Dealer Name	Service Technician Name	Service Performed	Special Concerns

15.0 NOTES

44.1

15.0 NOTES