INSTALLER: LEAVE THIS MANUAL WITH THE APPLIANCE.
CONSUMER: RETAIN THIS MANUAL FOR FUTURE REFERENCE.
NEVER LEAVE CHILDREN OR OTHER AT RISK INDIVIDUALS ALONE WITH THE APPLIANCE

NAPOLEON®
QUALITY FIREPLACES

INSTALLATION AND OPERATING INSTRUCTIONS

CERTIFIED UNDER CANADIAN AND AMERICAN NATIONAL STANDARDS: ANSI Z21.50 • CSA 2.22 FOR VENTED GAS FIREPLACES.

GDS26N
NATURAL GAS

GDS26P
PROPANE

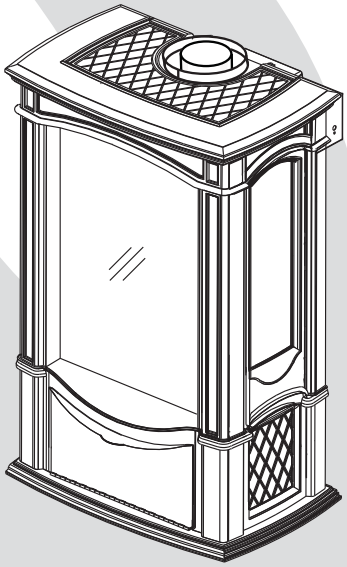

CERTIFIED FOR CANADA AND UNITED STATES USING ANSI/CSA METHODS.

SAFETY INFORMATION

WARNING

If the information in these instructions are not followed exactly, a fire or explosion may result causing property damage, personal injury or loss of life.

- Do not store or use gasoline or other flammable vapors and liquids in the vicinity of this or any other appliance.
- WHAT TO DO IF YOU SMELL GAS:
- **Do not try to light any appliance.**
- **Do not touch any electrical switch; do not use any phone in your building.**
- **Immediately call your gas supplier from a neighbour's phone. Follow the gas supplier's instructions.**
- **If you cannot reach your gas supplier, call the fire department.**

- Installation and service must be performed by a qualified installer, service agency or the supplier.

This appliance may be installed in an aftermarket, permanently located, manufactured home (USA only) or mobile home, where not prohibited by local codes.

This appliance is only for use with the type of gas indicated on the rating plate. This appliance is not convertible for use with other gases, unless a certified kit is used.

WARNING

HOT GLASS WILL CAUSE BURNS.

DO NOT TOUCH GLASS UNTIL COOLED.

NEVER ALLOW CHILDREN TO TOUCH GLASS.

APPLY SERIAL NUMBER LABEL FROM CARTON

Serial No. XXXXXX000000
MODEL NO.

HPBA Hearth, Patio & Barbecue Association
GO GREEN ECO-FRIENDLY TECHNOLOGY
Quality System Certified To ISO 9001-2008
C ETL LISTED US Intertek

Wolf Steel Ltd., 24 Napoleon Rd., Barrie, ON, L4M 0G8 Canada /
103 Miller Drive, Crittenden, Kentucky, USA, 41030
Phone (705)721-1212 • Fax (705)722-6031 • www.napoleonfireplaces.com • ask@napoleonproducts.com

Obadiah's · 406-300-1776

TABLE OF CONTENTS

1.0	INSTALLATION OVERVIEW	3
2.0	**INTRODUCTION**	**4**
2.1	DIMENSIONS	5
2.2	GENERAL INSTRUCTIONS	5
2.3	GENERAL INFORMATION	6
2.4	RATING PLATE INFORMATION	7
3.0	**VENTING**	**8**
3.1	VENTING LENGTHS AND COMPONENTS	8
3.2	TYPICAL VENT INSTALLATION	9
3.3	SPECIAL VENT INSTALLATIONS	11
3.3.1	PERISCOPE TERMINATION	11
3.3.2	CORNER TERMINATION	11
3.4	MINIMUM AIR TERMINAL LOCATION CLEARANCES	12
3.5	VENTING APPLICATION FLOW CHART	13
3.6	DEFINITIONS	13
3.7	ELBOW VENT LENGTH VALUES	14
3.8	TOP EXIT HORIZONTAL TERMINATION	14
3.9	REAR EXIT HORIZONTAL TERMINATION	16
3.10	TOP OR REAR EXIT VERTICAL TERMINATION	18
3.11	VERTICAL THROUGH EXISTING CHIMNEY	21
3.12	REAR VENT CONVERSION	22
4.0	**INSTALLATION**	**23**
4.1	WALL AND CEILING PROTECTION	23
4.1.1	HORIZONTAL INSTALLATION	24
4.1.2	VERTICAL INSTALLATION	24
4.1.3	APPLIANCE VENT CONNECTION	25
4.1.4	HORIZONTAL AIR TERMINAL INSTALLATION	25
4.1.5	EXTENDED HORIZONTAL AND CORNER TERMINAL INSTALLATION	26
4.1.6	VERTICAL AIR TERMINAL INSTALLATION	27
4.2	MOBILE HOME INSTALLATION	28
4.3	GAS INSTALLATION	29
4.4	MINIMUM CLEARANCE TO COMBUSTIBLES	30
5.0	**ELECTRICAL CONNECTION**	**32**
5.1	WIRING DIAGRAM	32
6.0	**FINISHING**	**33**
6.1	GLASS DOOR	33
6.2	DOOR GLASS REPLACEMENT	34
6.3	LOG PLACEMENT	34
6.4	CHARCOAL EMBERS	35
6.5	VERMICULITE	35
6.6	GLOWING EMBERS	35
6.7	LOGO PLACEMENT	35
7.0	**OPTIONAL BLOWER INSTALLATION**	**36**
8.0	**OPERATION**	**37**
8.1	SWITCH FUNCTIONS	37
9.0	**ADJUSTMENTS**	**38**
9.1	PILOT INJECTOR AND ORIFICE REPLACEMENT	38
9.2	PRESSURE CHECK	38
9.3	FLAME CHARACTERISTICS	39
9.4	VENTURI ADJUSTMENT	39
9.5	RESTRICTING VERTICAL VENTS	39
10.0	**MAINTENANCE**	**40**
10.1	NIGHT LIGHT™ REPLACEMENT	40
10.1.1	BULB REPLACEMENT	40
10.1.2	LENS ASSEMBLY INSTALLATION	41
10.1.3	LENS ASSEMBLY REPLACEMENT	41
10.2	CARE OF GLASS	41
11.0	**REPLACEMENTS**	**42**
12.0	**TROUBLESHOOTING**	**46**
13.0	**WARRANTY**	**49**
14.0	**SERVICE HISTORY**	**50**

<u>NOTE:</u> Changes, other than editorial, are denoted by a vertical line in the margin.

1.0 INSTALLATION OVERVIEW

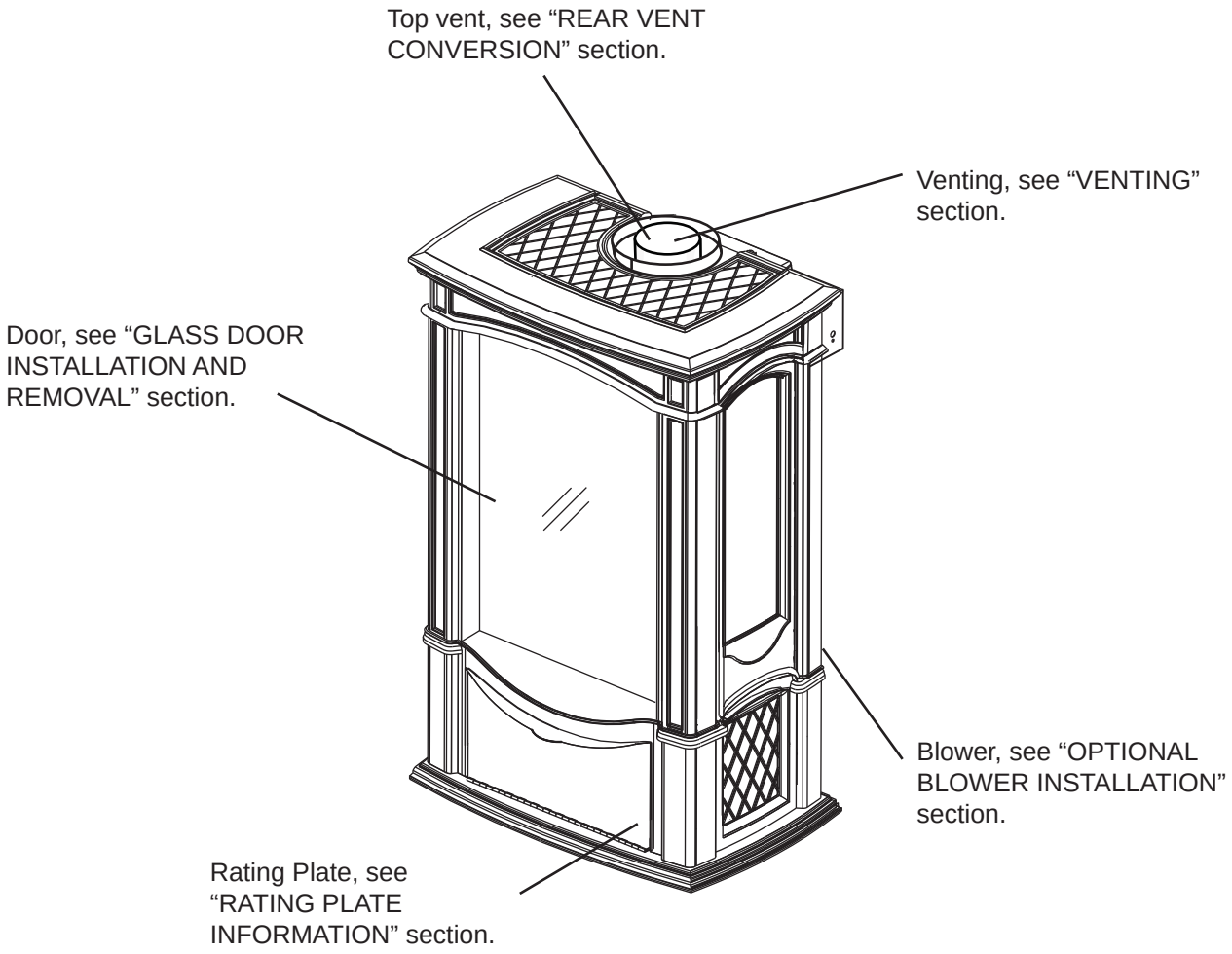

2.0 INTRODUCTION

⚠ WARNING

- **THIS APPLIANCE IS HOT WHEN OPERATED AND CAN CAUSE SEVERE BURNS IF CONTACTED.**
- **ANY CHANGES TO THIS APPLIANCE OR IT'S CONTROLS CAN BE DANGEROUS AND IS PROHIBITED.**
- Do not operate appliance before reading and understanding operating instructions. Failure to operate appliance according to operating instructions could cause fire or injury.
- Risk of fire or asphyxiation do not operate appliance with fixed glass removed.
- Do not connect 110 volts to the control valve.
- Risk of burns. The appliance should be turned off and cooled before servicing.
- Do not install damaged, incomplete or substitute components.
- Risk of cuts and abrasions. Wear protective gloves and safety glasses during installation. Sheet metal edges may be sharp.
- Do not burn wood or other materials in this appliance.
- Children and adults should be alerted to the hazards of high surface temperature and should stay away to avoid burns or clothing ignition.
- Young children should be carefully supervised when they are in the same room as the appliance. Toddlers, young children and others may be susceptible to accidental contact burns. A physical barrier is recommended if there are at risk individuals in the house. To restrict access to an appliance or stove, install an adjustable safety gate to keep toddlers, young children and other at risk individuals out of the room and away from hot surfaces.
- Clothing or other flammable material should not be placed on or near the appliance.
- Due to high temperatures, the appliance should be located out of traffic and away from furniture and draperies.
- Ensure you have incorporated adequate safety measure to protect infants/toddlers from touching hot surfaces.
- Even after the appliance is out, the glass and/or screen will remain hot for an extended period of time.
- Check with your local hearth specialty dealer for safety screens and hearth guards to protect children from hot surfaces. These screens and guards must be fastened to the floor.
- Any safety screen or guard removed for servicing must be replaced prior to operating the appliance.
- The appliance is a vented gas-fired appliance. Do not burn wood or other materials in the appliance.
- It is imperative that the control compartments, burners and circulating blower and its passageway in the appliance and venting system are kept clean. The appliance and its venting system should be inspected before use and at least annually by a qualified service person. More frequent cleaning may be required due to excessive lint from carpeting, bedding material, etc. The appliance area must be kept clear and free from combustible materials, gasoline and other flammable vapors and liquids.
- Under no circumstances should this appliance be modified.
- This appliance must not be connected to a chimney flue pipe serving a separate solid fuel burning appliance.
- Do not use this appliance if any part has been under water. Immediately call a qualified service technician to inspect the appliance and to replace any part of the control system and any gas control which has been under water.
- Do not operate the appliance with the glass door removed, cracked or broken. Replacement of the glass should be done by a licensed or qualified service person.
- Do not strike or slam shut the appliance glass door.
- When equipped with pressure relief doors, they must be kept closed while the appliance is operating to prevent exhaust fumes containing carbon monoxide, from entering into the home. Temperatures of the exhaust escaping through these openings can also cause the surrounding combustible materials to overheat and catch fire.Only doors / optional fronts certified with the unit are to be installed on the appliance.
- Only doors / optional fronts certified with the unit are to be installed on the appliance.
- Keep the packaging material out of reach of children and dispose of the material in a safe manner. As with all plastic bags, these are not toys and should be kept away from children and infants.
- As with any combustion appliance, we recommend having your appliance regularly inspected and serviced as well as having a Carbon Monoxide Detector installed in the same area to defend you and your family against Carbon Monoxide.
- Ensure clearances to combustibles are maintained when building a mantel or shelves above the appliance. Elevated temperatures on the wall or in the air above the appliance can cause melting, discolouration or damage to decorations, a T.V. or other electronic components.
- This appliance uses and requires a fast acting thermocouple. Replace only with a fast acting thermocouple supplied by Wolf Steel Ltd.

3.1C

2.1 DIMENSIONS

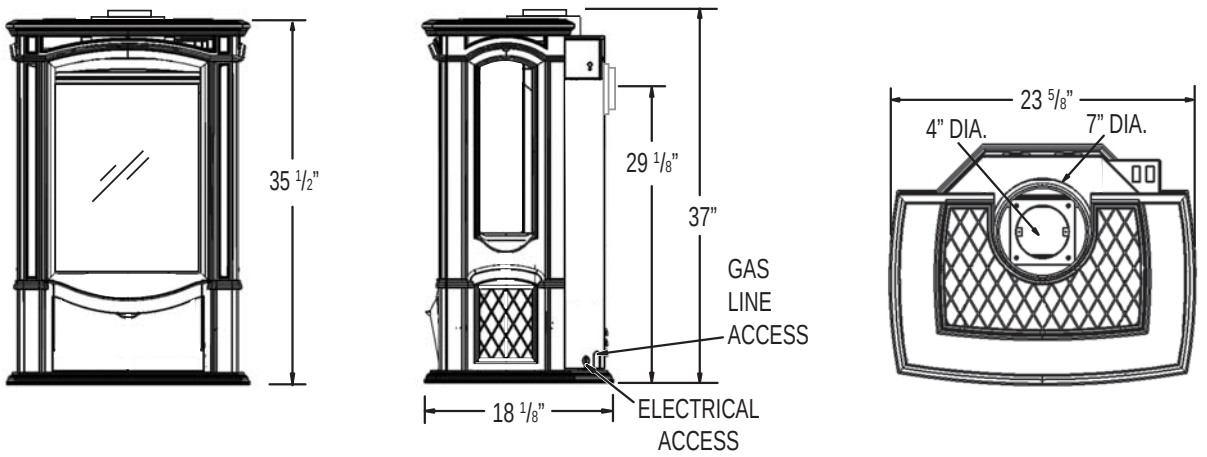

2.2 GENERAL INSTRUCTIONS

⚠ WARNING
ALWAYS LIGHT THE PILOT WHETHER FOR THE FIRST TIME OR IF THE GAS SUPPLY HAS RUN OUT, WITH THE GLASS DOOR OPENED OR REMOVED.
PROVIDE ADEQUATE CLEARANCE FOR SERVICING AND OPERATING THE APPLIANCE.
PROVIDE ADEQUATE VENTILATION.
NEVER OBSTRUCT THE FRONT OPENING OF THE APPLIANCE.
OBJECTS PLACED IN FRONT OF THE APPLIANCE MUST BE KEPT A MINIMUM OF 48" FROM THE FRONT FACE OF THE APPLIANCE.
SURFACES AROUND AND ESPECIALLY ABOVE THE APPLIANCE CAN BECOME HOT. AVOID CONTACT WHEN THE APPLIANCE IS OPERATING.
FIRE RISK. EXPLOSION HAZARD. **HIGH PRESSURE WILL DAMAGE VALVE. DISCONNECT GAS SUPPLY PIPING BEFORE PRESSURE TESTING GAS LINE AT TEST PRESSURES ABOVE 1/2 PSIG. CLOSE THE MANUAL SHUT-OFF VALVE BEFORE PRESSURE TESTING GAS LINE AT TEST PRESSURES EQUAL TO OR LESS THAN 1/2 PSIG.**
USE ONLY WOLF STEEL APPROVED OPTIONAL ACCESSORIES AND REPLACEMENT PARTS WITH THIS APPLIANCE. USING NON-LISTED ACCESSORIES (BLOWERS, DOORS, LOUVRES, TRIMS, GAS COMPONENTS, VENTING COMPONENTS, ETC.) COULD RESULT IN A SAFETY HAZARD AND WILL VOID THE WARRANTY AND CERTIFICATION.

THIS GAS APPLIANCE SHOULD BE INSTALLED AND SERVICED BY A QUALIFIED INSTALLER to conform with local codes. Installation practices vary from region to region and it is important to know the specifics that apply to your area, for example in Massachusetts State:

- This product must be installed by a licensed plumber or gas fitter when installed within the commonwealth of Massachusetts.
- The appliance damper must be removed or welded in the open position prior to installation of a appliance insert or gas log.
- The appliance off valve must be a "T" handle gas cock.
- The flexible connector must not be longer than 36 inches.
- A Carbon Monoxide detector is required in all rooms containing gas fired appliances.
- The appliance is not approved for installation in a bedroom or bathroom unless the unit is a direct vent sealed combustion product.

The installation must conform with local codes or, in absence of local codes, the National Gas and Propane Installation Code CSA B149.1 in Canada, or the National Fuel Gas Code, ANSI Z223.1 / NFPA 54 in the United States. Suitable for mobile home installation if installed in accordance with the current standard CAN/CSA Z240MH Series, for gas equipped mobile homes, in Canada or ANSI Z223.1 and NFPA 54 in the United States.

NATIONAL FIREPLACE INSTITUTE NFI CERTIFIED www.nficertified.org

We suggest that our gas hearth products be installed and serviced by professionals who are certified in the U.S. by the National Fireplace Institute® (NFI) as NFI Gas Specialists

As long as the required clearance to combustibles is maintained, the most desirable and beneficial location for an appliance is in the center of a building, thereby allowing the most efficient use of the heat created. The location of windows, doors and the traffic flow in the room where the appliance is to be located should be considered. If possible, you should choose a location where the vent will pass through the house without cutting a floor or roof joist.

If the appliance is installed directly on carpeting, vinyl tile or other combustible material other than wood flooring, the appliance shall be installed on a metal or wood panel extending the full width and depth.

Some appliances have optional fans or blowers. If an optional fan or blower is installed, the junction box must be electrically connected and grounded in accordance with local codes, use the current CSA C22.1 Canadian Electrical Code in Canada or the ANSI/NFPA 70 National Electrical code in the United States.

4.1A

2.3 GENERAL INFORMATION

FOR YOUR SATISFACTION, THIS APPLIANCE HAS BEEN TEST-FIRED TO ASSURE ITS OPERATION AND QUALITY!

APPLIANCE		
	NG	**LP**
Altitude (FT)	0-4,500	0-4,500
Max. Input (BTU/HR)	25,000	25,000
Max. Output Steady State (BTU/HR)	20,500	20,500
Efficiency (w/the fan on)	82%	82%
Min. Inlet Gas Supply Pressure	4.5" Water Column	11" Water Column
Max. Inlet Gas Supply Pressure	7" Water Column	13" Water Column
Manifold Pressure (Under Flow Conditions)	3.5" Water Column	10" Water Column

Expansion / contraction noises during heating up and cooling down cycles are normal and to be expected.

This appliance is only for use with the type of gas indicated on the rating plate. This appliance is not convertible for use with other gases, unless a certified kit is used.

Never obstruct the front opening of the appliance.

2.4 RATING PLATE INFORMATION

<u>INSTALLER:</u> It is your responsibility to check off the appropriate box on the rating plate according to the model, venting and gas type of the appliance.

The rating label is located behind the control door and is chained to the appliance. **DO NOT REMOVE.** For rating plate location, see “INSTALLATION OVERVIEW” section.

This illustration is for reference only. Refer to the rating plate on the appliance for accurate information.

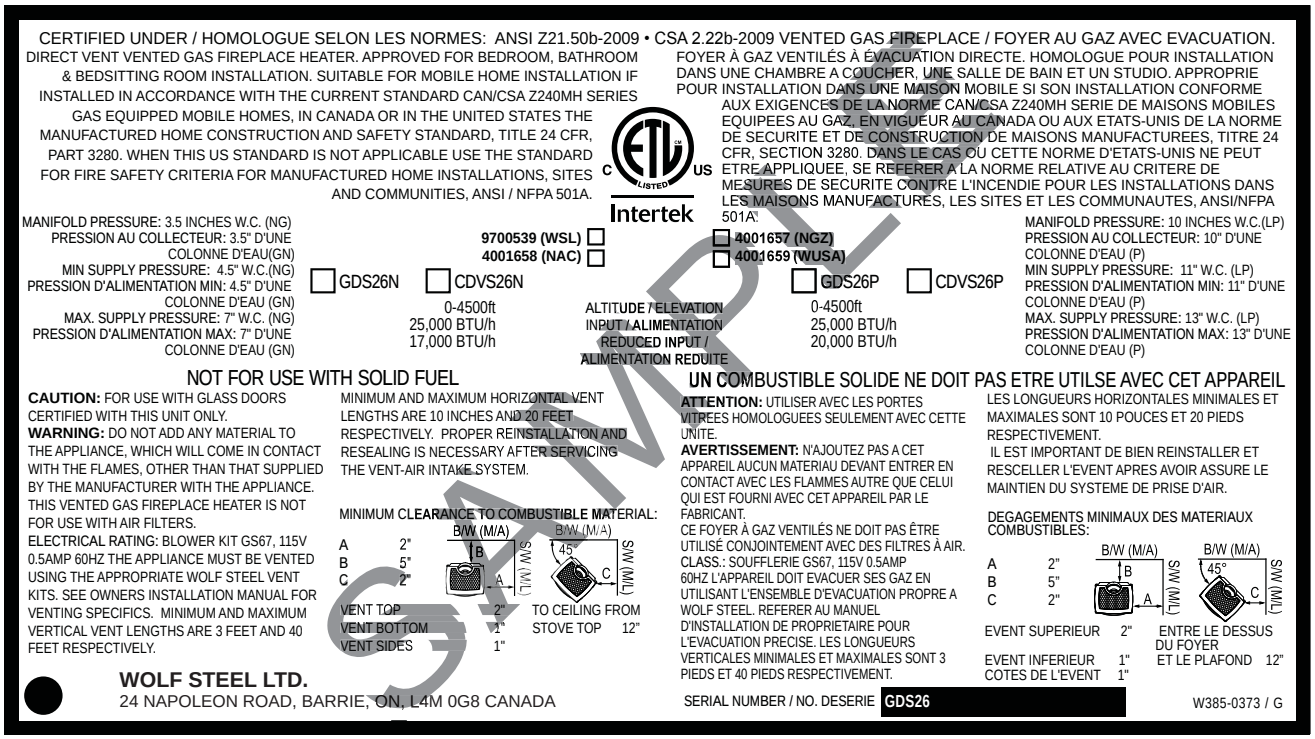

3.0 VENTING

⚠ WARNING

RISK OF FIRE, MAINTAIN SPECIFIED AIR SPACE CLEARANCES TO VENT PIPE AND APPLIANCE.

IF VENTING IS INCLUDED WITH SPACERS THE VENT SYSTEM MUST BE SUPPORTED EVERY 3 FEET FOR BOTH VERTICAL AND HORIZONTAL RUNS. USE SUPPORTS OR EQUIVALENT NON-COMBUSTIBLE STRAPPING TO MAINTAIN THE REQUIRED CLEARANCE FROM COMBUSTIBLES. USE WOLF STEEL LTD. SUPPORT RING ASSEMBLY W010-0370 OR EQUIVALENT NON-COMBUSTIBLE STRAPPING TO MAINTAIN THE MINIMUM CLEARANCE TO COMBUSTIBLES FOR BOTH VERTICAL AND HORIZONTAL RUNS. SPACERS ARE ATTACHED TO THE INNER PIPE AT PREDETERMINED INTERVALS TO MAINTAIN AN EVEN AIR GAP TO THE OUTER PIPE. THIS GAP IS REQUIRED FOR SAFE OPERATION. A SPACER IS REQUIRED AT THE START, MIDDLE AND END OF EACH ELBOW TO ENSURE THIS GAP IS MAINTAINED. THESE SPACERS MUST NOT BE REMOVED.

THIS APPLIANCE USES A 4” EXHAUST / 7” AIR INTAKE VENT PIPE SYSTEM.
Refer to the section applicable to your installation.

For safe and proper operation of the appliance follow the venting instruction exactly. Deviation from the minimum vertical vent length can create difficulty in burner start-up and/or carboning. Under extreme vent configurations, allow several minutes (5-15) for the flame to stabilize after ignition. Provide a means for visually checking the vent connection to the appliance after the appliance is installed. Use a firestop, vent pipe shield or attic insulation shield when penetrating interior walls, floor or ceiling.
NOTE: If for any reason the vent air intake system is disassembled; reinstall per the instructions provided for the initial installation.

7.1A

3.1 VENTING LENGTHS AND COMPONENTS

Use only Wolf Steel, Simpson Dura-Vent, Selkirk Direct Temp, American Metal Amerivent or Metal-Fab venting components. Minimum and maximum vent lengths, for both horizontal and vertical installations, and air terminal locations for either system are set out in this manual and must be adhered to. For Simpson Dura-Vent, Selkirk Direct Temp, American Metal Amerivent and Metal-Fab follow the installation procedure provided with the venting components.

A starter adaptor must be used with the following vent systems and may be purchased from the corresponding supplier:

PART	4”/7”	SUPPLIER	WEBSITE
Duravent	GDS924N	Wolf Steel	www.duravent.com
Amerivent	4DSC-N2	American Metal	www.americanmetalproducts.com
Direct Temp	4DT-AAN	Selkirk	www.selkirkcorp.com
SuperSeal	4DNA	Metal-Fab	www.mtlfab.com

*** For Simpson Dura-Vent, Selkirk Direct Temp, American Metal Amerivent and Metal-Fab follow the installation procedure found on the website for your venting supplier.**

For vent systems that provide seals on the inner exhaust flue, only the outer air intake joints must be sealed using a red high temperature silicone (RTV). This same sealant may be used on both the inner exhaust and outer intake vent pipe joints of all other approved vent systems except for the exhaust vent pipe connection to the appliance flue collar which must be sealed using the black high temperature sealant Mill Pac.

When using Wolf Steel venting components, use only approved Wolf Steel termination kits: wall terminal kit **GD175** (7/12’ of venting included), or 1/12 to 7/12 pitch roof terminal kit **GD110**, 8/12 to 12/12 roof terminal kit **GD111**, flat roof terminal kit **GD112** or periscope kit **GD180** (for wall penetration below grade) in conjunction with the appropriate venting components.

For optimum flame appearance and appliance operation, keep the vent length and number of elbows to a minimum. It is recommended that all horizontal runs have a minimum 1/4” rise per foot. The air terminal must remain unobstructed at all times. Examine the air terminal at least once a year to verify that it is unobstructed and undamaged. Rigid and flexible venting systems must not be combined. Different venting manufacturers components must not be combined.

These vent kits allow for either horizontal or vertical venting of the appliance. The maximum allowable horizontal run is 20 feet. The maximum allowable vertical vent length is 40 feet. The maximum number of vent connections is two horizontally or three vertically (excluding the appliance and the air terminal connections) when using flexible venting.

Deviation from the minimum vertical vent length can create difficulty in burner start-up and/or carboning. Use an adjustable pipe as the final length of rigid piping to the stove for ease of installation.

8.5

3.2 TYPICAL VENT INSTALLATION

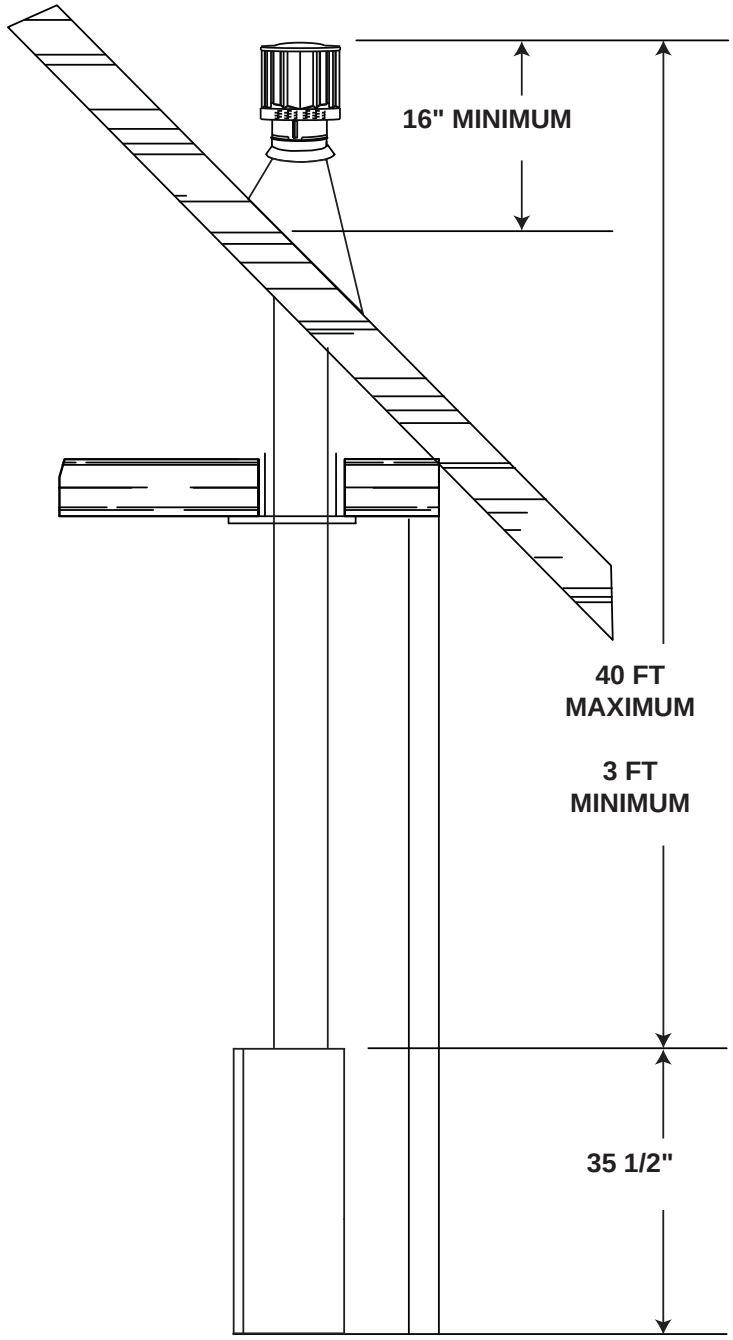

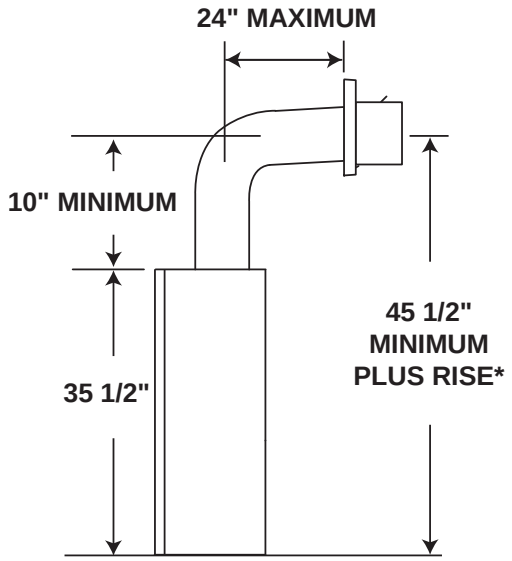

* See "VENTING" section

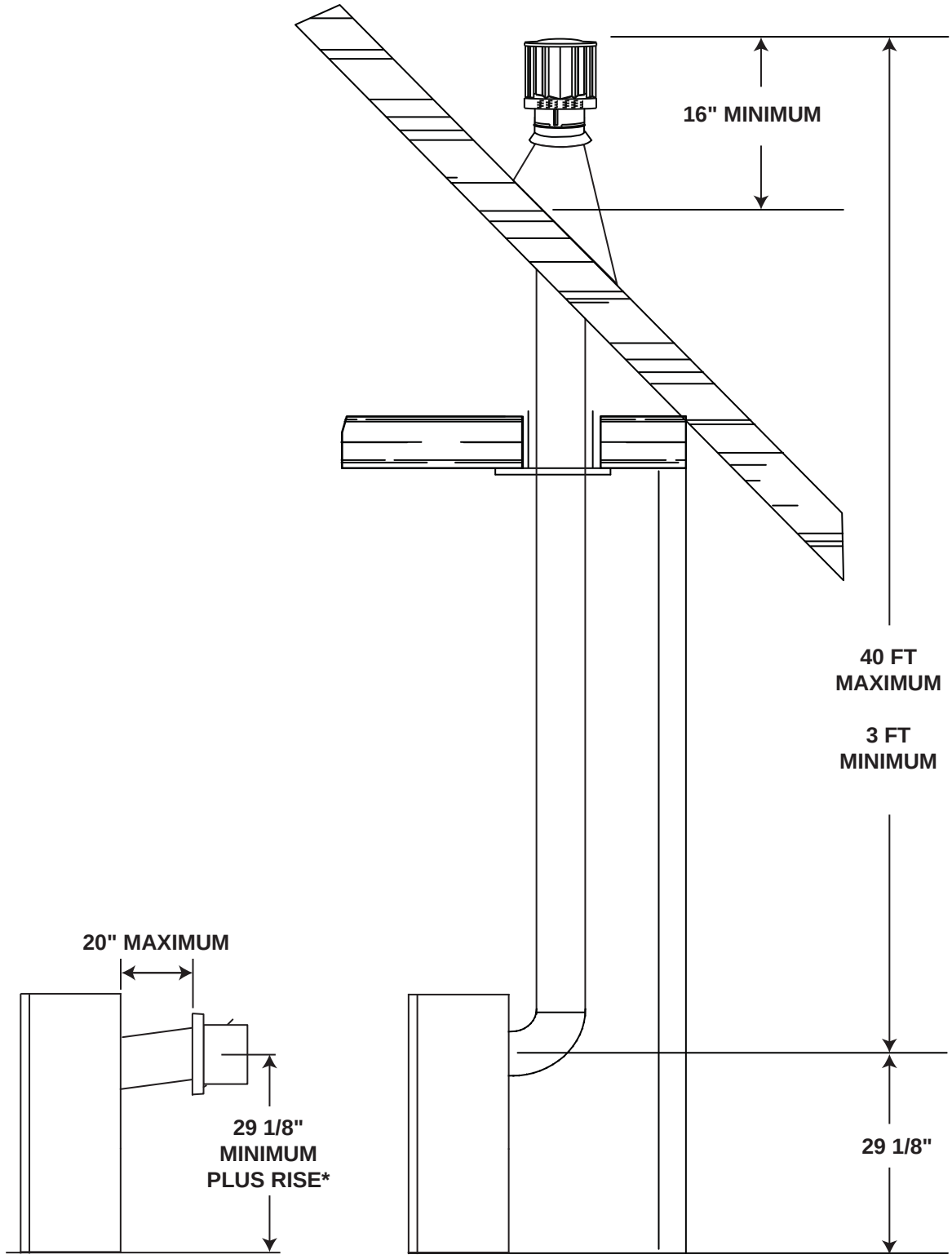

* See "VENTING" section

3.3 SPECIAL VENT INSTALLATIONS

3.3.1 PERISCOPE TERMINATION

Use the periscope kit to locate the air termination above grade. The periscope must be installed so that when final grading is completed, the bottom air slot is located a minimum 12” above grade. The maximum allowable vent length is 10’ for a fireplace and 8’ for a stove.

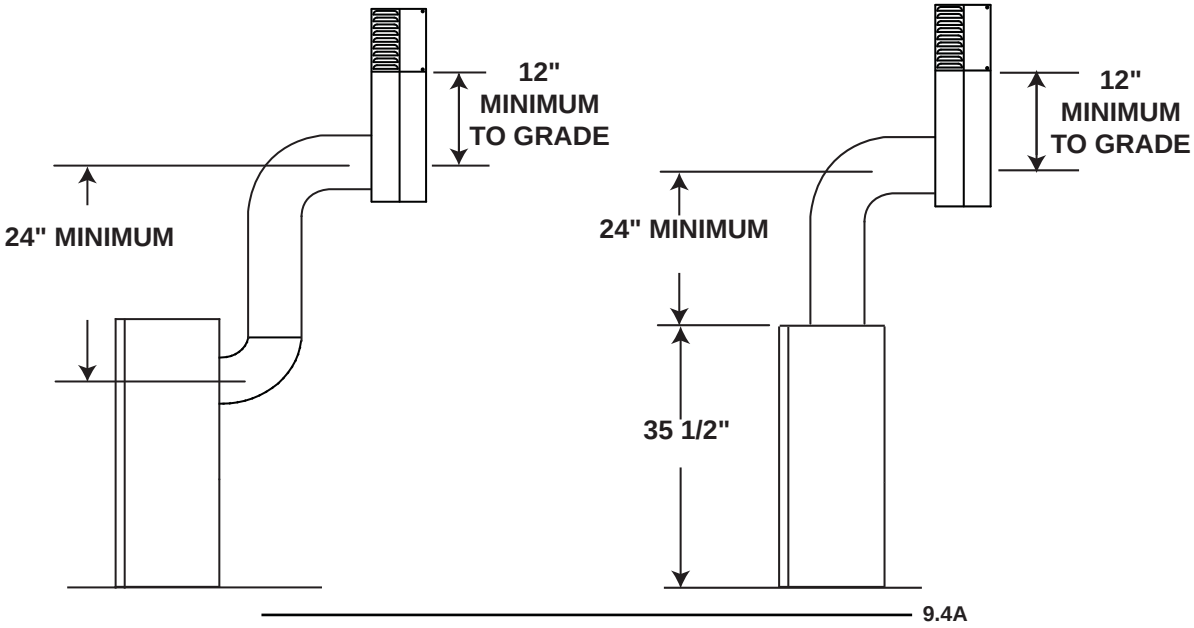

3.3.2 CORNER TERMINATION

The maximum vent length for a corner installation is 20" of horizontal run, in addition to the 45° offset. In this case zero rise is acceptable. See illustrations below. It is recommended to maintain a 6" rise.

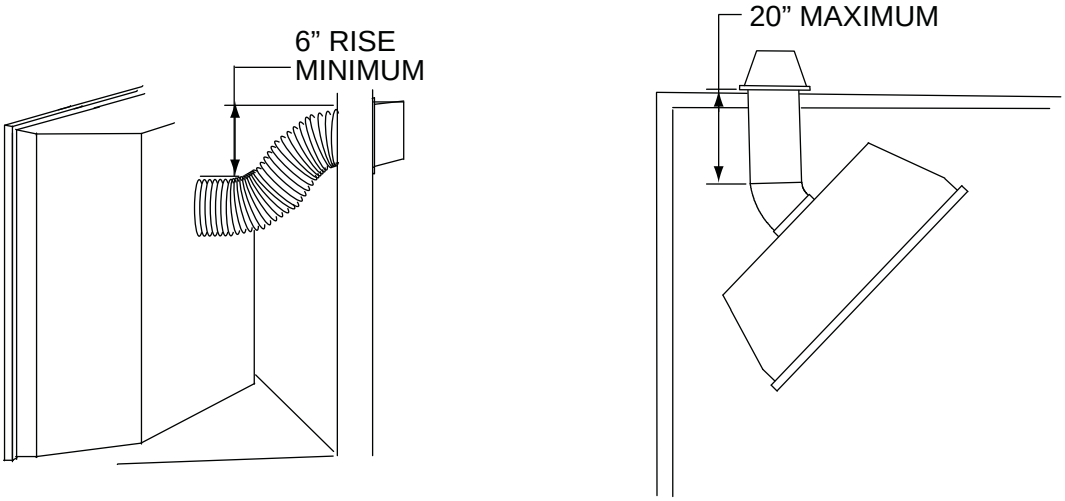

3.4 MINIMUM AIR TERMINAL LOCATION CLEARANCES

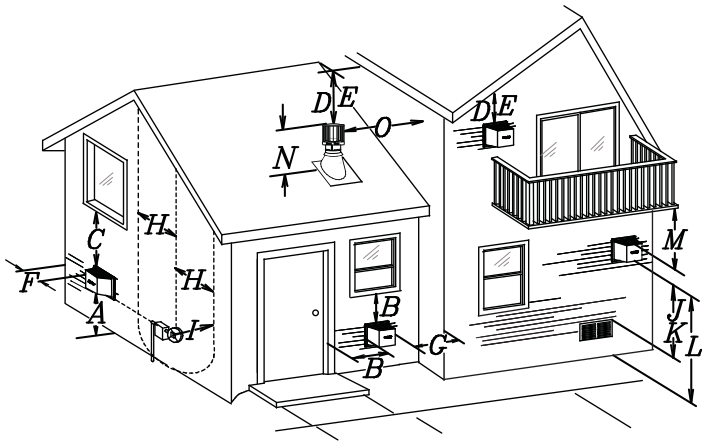

COVERED BALCONY APPLICATIONS

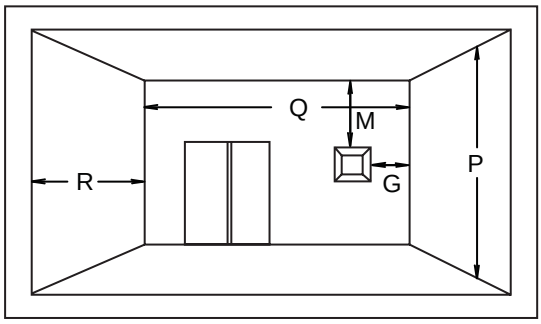

Q_{MIN}	= 3 feet
R_{MAX}	= 2 x Q_{ACTUAL}
R_{MAX}	≤ 15 feet

	INSTALLATIONS		
	CANADA	U.S.A.	
A	12”	12”	Clearance above grade, veranda porch, deck or balcony.
B	12” Δ	9” Δ	Clearance to windows or doors that open.
C	12” *	12” *	Clearance to permanently closed windows.
D	18” **	18” **	Vertical clearance to ventilated soffits located above the terminal within a horizontal distance of 2’ from the centerline of the terminal.
E	18” **	18” **	Clearance to unventilated soffit.
F	0”	0”	Clearance to an outside corner wall.
G	0” ***	0” ***	Clearance to an inside **non**-combustible corner wall or protruding **non**-combustible obstructions (chimney, etc.).
	2” ***	2” ***	Clearance to an inside combustible corner wall or protruding combustible obstructions (vent chase, etc.).
H	3’	3’ ****	Clearance to each side of the centerline extended above the meter / regulator assembly to a maximum vertical distance of 15’.
I	3’	3’ ****	Clearance to a service regulator vent outlet.
J	12”	9”	Clearance to a non-mechanical air supply inlet to the building or a combustion air inlet to any other appliance.
K	6’	3’ †	Clearance to a mechanical air supply inlet.
L	7’ ‡	7’ ****	Clearance above a paved sidewalk or paved driveway located on public property.
M	12” ††	12” ****	Clearance under a veranda, porch, deck or balcony.
N	16”	16”	Clearance above the roof.
O	2’ †*	2’ †*	Clearance from an adjacent wall including neighbouring buildings.
P	8’	8’	Roof must be **non**-combustible without openings.
Q	3’	3’	See chart for wider wall dimensions.
R	6’	6’	See chart for deeper wall dimensions. The terminal shall not be installed on any wall that has an opening between the terminal and the open side of the structure.

Δ In a structure with three walls and a roof, the terminal shall not be located less than 6 feet under a window that opens on a horizontal plane.

* Recommended to prevent condensation on windows and thermal breakage

** It is recommended to use a heat shield and to maximize the distance to vinyl clad soffits.

*** The periscope requires a minimum 18” clearance from an inside corner.

**** This is a recommended distance. For additional requirements check local codes.

† 3 feet above if within 10 feet horizontally.

‡ A vent shall not terminate where it may cause hazardous frost or ice accumulations on adjacent property surfaces.

†† Permitted only if the veranda, porch, or deck is fully open on a minimum of two sides beneath the floor.

†* Recommended to prevent recirculation of exhaust products. For additional requirements check local codes.

NOTE: Clearances are in accordance with local installation codes and the requirements of the gas supplier.

Obadiah's · 406-300-1776

3.5 VENTING APPLICATION FLOW CHART

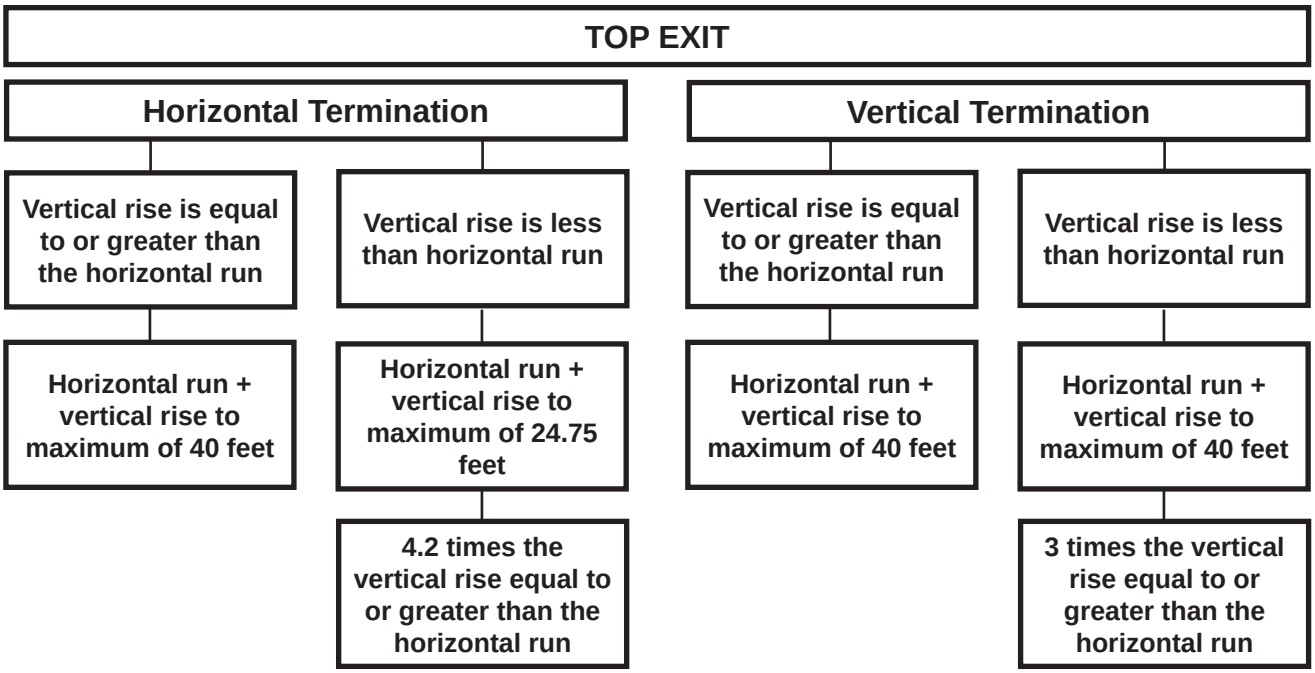

13.1

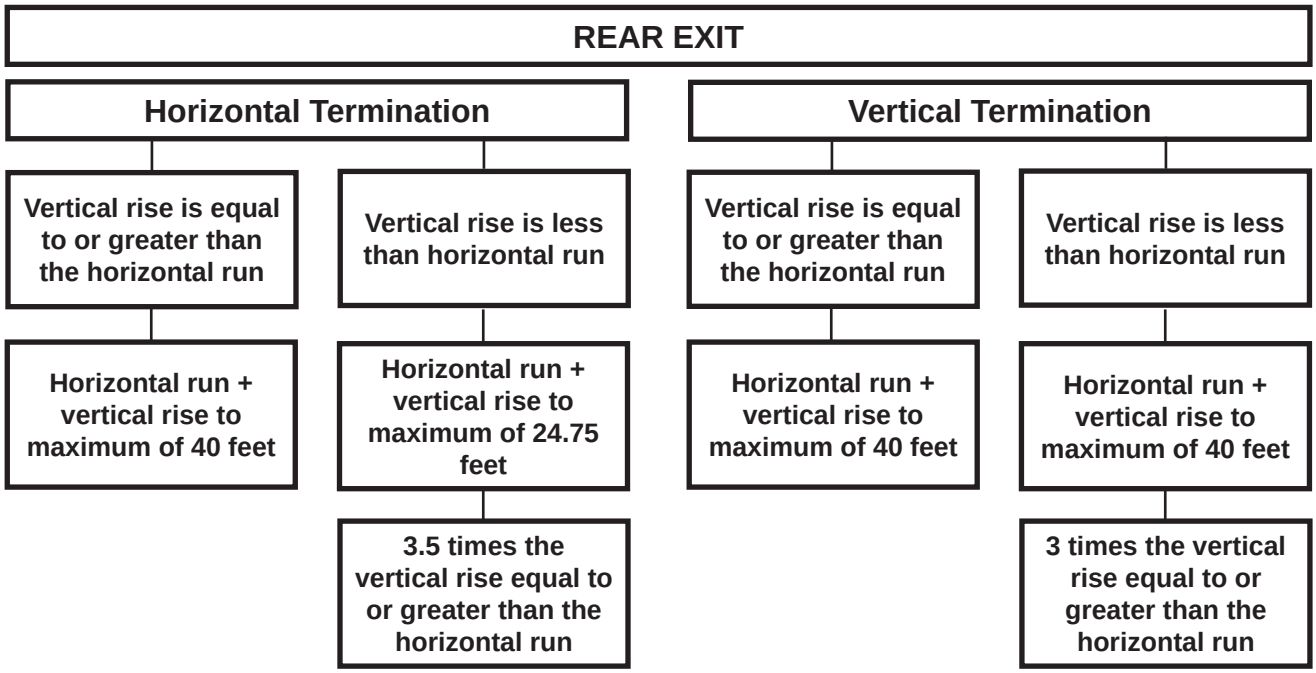

13.2

3.6 DEFINITIONS

For the following symbols used in the venting calculations and examples are:

> - greater than
≥ - equal to or greater than
< - less than
≤ - equal to or less than
H_T - total of both horizontal vent lengths (Hr) and offsets (Ho) in feet
H_R - combined horizontal vent lengths in feet
H_O - offset factor: .03 (total degrees of offset - 90°*) in feet
V_T - combined vertical vent lengths in feet

14.1

3.7 ELBOW VENT LENGTH VALUES

	FEET	INCHES
1°	0.03	0.5
15°	0.45	6.0
30°	0.9	11.0
45°	1.35	16.0
90°*	2.7	32.0

* The first 90° offset has a zero value and is shown in the formula as - 90°

15.1

3.8 TOP EXIT HORIZONTAL TERMINATION

$(H_T) \leq (V_T)$

Simple venting configuration (only one 90° elbow)

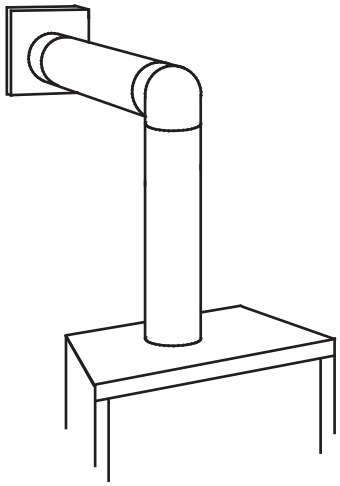

See graph to determine the required vertical rise V_T for the required horizontal run H_T.

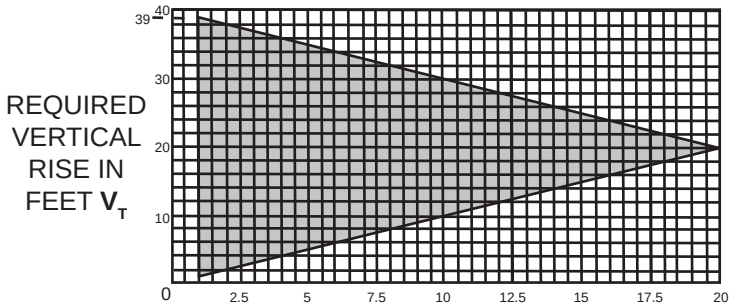

The shaded area within the lines represents acceptable values for H_T and V_T

For vent configurations requiring more than one 90° elbow, the following formulas apply:

Formula 1: $H_T \leq V_T$

Formula 2: $H_T + V_T \leq 40$ feet

Example:

V_1 = 3 FT

V_2 = 8 FT

$V_T = V_1 + V_2$ = 3 FT + 8 FT = 11 FT

H_1 = 2.5 FT

H_2 = 2 FT

$H_R = H_1 + H_2$ = 2.5 + 2 = 4.5 FT

H_O = .03 (three 90° elbows - 90°) = .03 (270° - 90°) = 5.4 FT

$H_T = H_R + H_O$ = 4.5 + 5.4 = 9.9 FT

$H_T + V_T$ = 9.9 + 11 = 20.9 FT

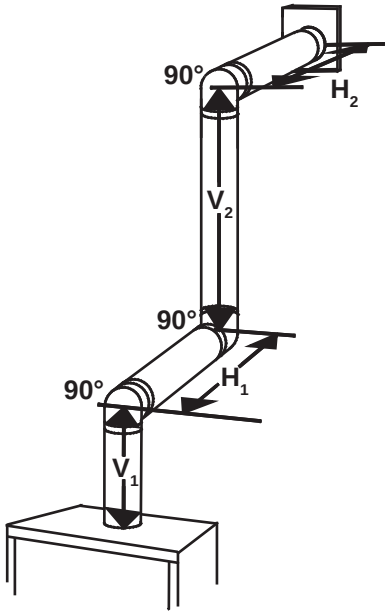

Formula 1: $H_T \leq V_T$

9.9 ≤ 11

Formula 2: $H_T + V_T \leq 40$ **FT**

20.9 ≤ 40

Since both formulas are met, this vent configuration is acceptable.

16.1A

$(H_T) > (V_T)$

Simple venting configuration (only one 90° elbow)

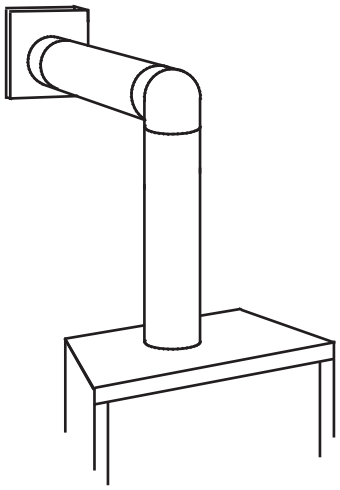

See graph to determine the required vertical rise $\mathbf{V_T}$ for the required horizontal run $\mathbf{H_T}$.

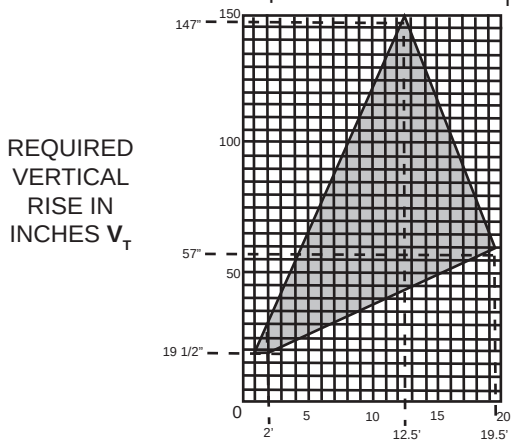

HORIZONTAL VENT RUN PLUS OFFSET IN FEET $\mathbf{H_T}$

The shaded area within the lines represents acceptable values for $\mathbf{H_T}$ and $\mathbf{V_T}$

For vent configurations requiring more than one 90° elbow, the following formulas apply:

Formula 1: $H_T \leq 4.2\ V_T$
Formula 2: $H_T + V_T \leq 24.75$ feet

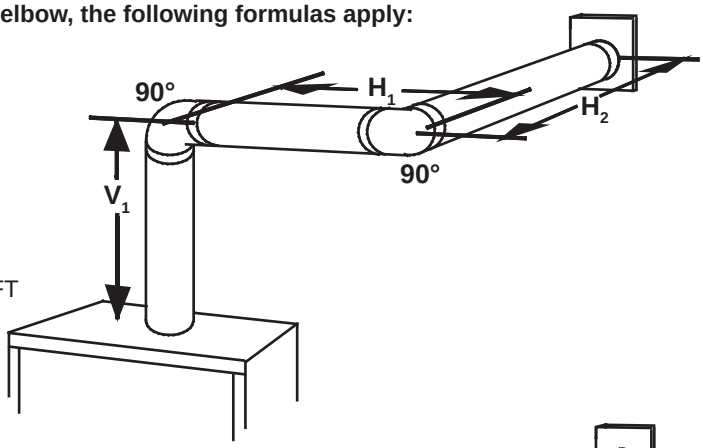

Example:
$V_1 = V_T = 6$ FT
$H_1 = 3$ FT
$H_2 = 5$ FT
$H_R = H_1 + H_2 = 3 + 5 = 8$ FT
$H_O = .03$ (two 90° elbows - 90°) = .03 (180° - 90°) = 2.7 FT
$H_T = H_R + H_O = 8 + 2.7 = 10.7$ FT
$H_T + V_T = 10.7 + 6 = 16.7$ FT

Formula 1: $H_T \leq 4.2\ V_T$
$4.2\ V_T = 4.2 \times 6 = 25.2$ FT
$10.7 \leq 25.2$

Formula 2: $H_T + V_T \leq 24.75$ FT
$16.7 \leq 24.75$

Since both formulas are met, this vent configuration is acceptable.

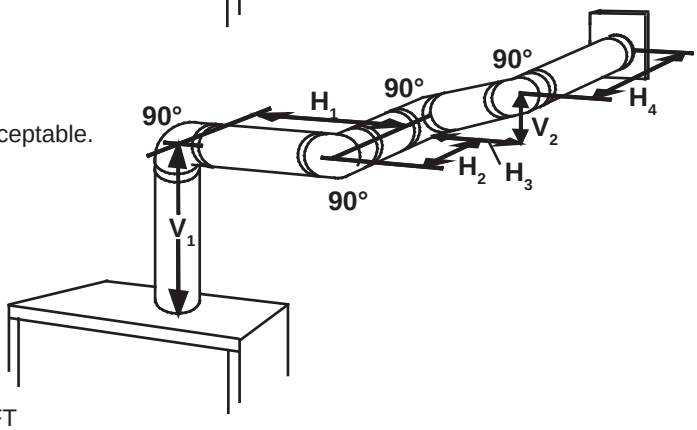

Example:
$V_1 = 4$ FT
$V_2 = 1.5$ FT
$V_T = V_1 + V_2 = 4 + 1.5 = 5.5$ FT
$H_1 = 2$ FT
$H_2 = 1$ FT
$H_3 = 1$ FT
$H_4 = 1.5$ FT
$H_R = H_1 + H_2 + H_3 + H_4 = 2 + 1 + 1 + 1.5 = 5.5$ FT
$H_O = .03$ (four 90° elbows - 90°) = .03 (360° - 90°) = 8.1 FT
$H_T = H_R + H_O = 5.5 + 8.1 = 13.6$ FT
$H_T + V_T = 13.6 + 5.5 = 19.1$ FT

Formula 1: $H_T \leq 4.2\ V_T$
$4.2\ V_T = 4.2 \times 5.5 = 23.1$ FT
$13.6 \leq 23.1$

Formula 2: $H_T + V_T \leq 24.75$ FT
$19.1 \leq 24.75$

Since both formulas are met, this vent configuration is acceptable.

16.1_2

3.9 REAR EXIT HORIZONTAL TERMINATION

$$(H_T) \leq (V_T)$$

Simple venting configuration (only two 90° elbows)

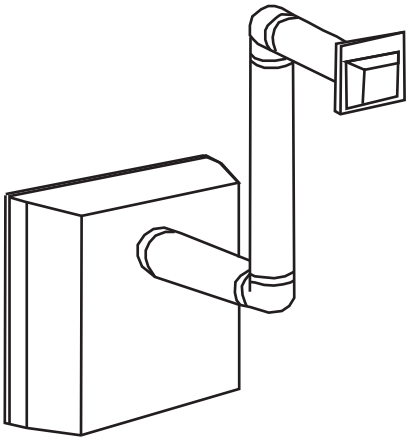

See graph to determine the required vertical rise $\mathbf{V_T}$ for the required horizontal run $\mathbf{H_T}$.

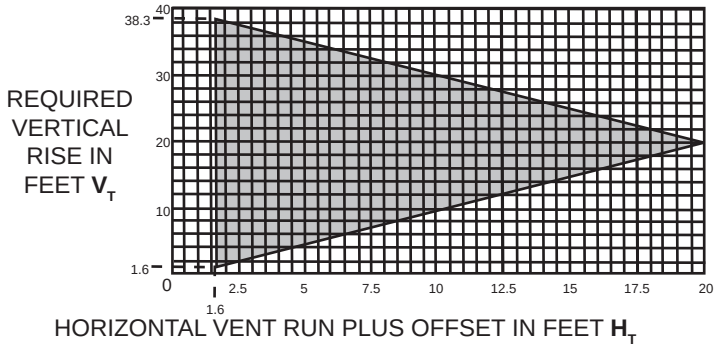

The shaded area within the lines represents acceptable values for $\mathbf{H_T}$ and $\mathbf{H_T}$

For vent configurations requiring more than two 90° elbows, the following formulas apply:

Formula 1: $\mathbf{H_T \leq V_T}$
Formula 2: $\mathbf{H_T + V_T \leq 40}$ **feet**

Example:
$\mathbf{V_1}$ = 9 FT
$\mathbf{V_2}$ = 6 FT
$\mathbf{V_T = V_1 + V_2}$ = 9 + 6 = 15 FT
$\mathbf{H_1}$ = 3 FT
$\mathbf{H_2}$ = 2 FT
$\mathbf{H_3}$ = 1.5 FT
$\mathbf{H_R = H_1 + H_2 + H_3}$ = 3 + 2 + 1.5 = 6.5 FT
$\mathbf{H_O}$ = .03 (four 90° elbows - 90°) = .03 (360° - 90°) = 8.1 FT
$\mathbf{H_T = H_R + H_O}$ = 6.5 + 8.1 = 14.6 FT
$\mathbf{H_T + V_T}$ = 14.6 + 15 = 29.6 FT

Formula 1: $\mathbf{H_T \leq V_T}$
14.6 ≤ 15
Formula 2: $\mathbf{H_T + V_T \leq 40}$ **FT**
29.6 ≤ 40
Since both formulas are met, this vent configuration is acceptable.

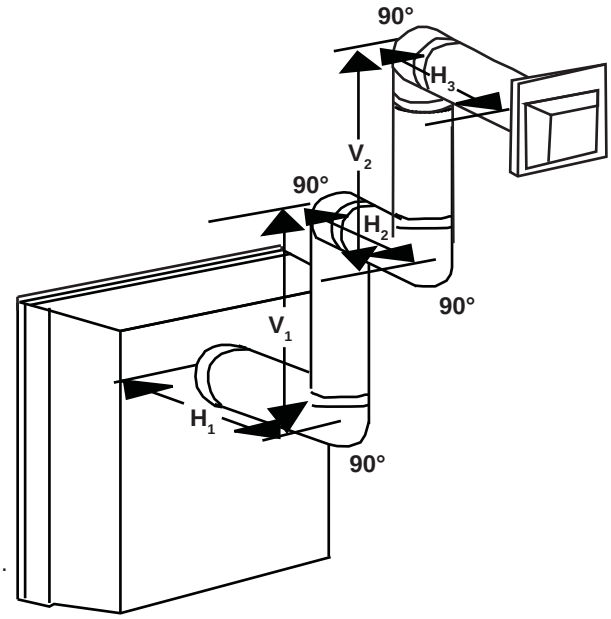

16.3

$(H_T) > (V_T)$

Simple venting configuration (only two 90° elbows)

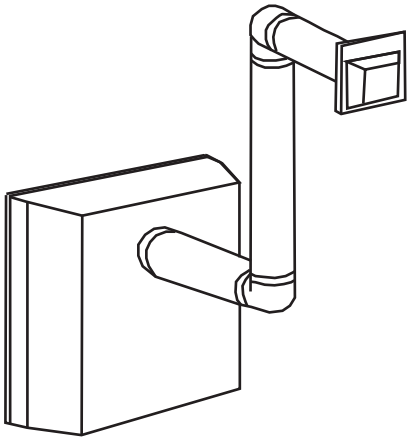

See graph to determine the required vertical rise $\mathbf{V_T}$ for the required horizontal run $\mathbf{H_T}$.

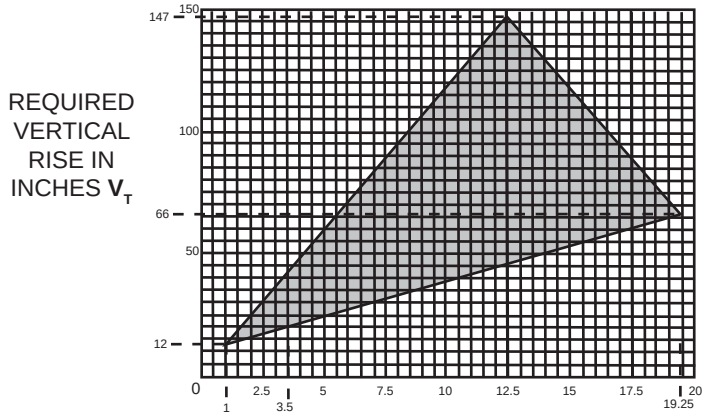

The shaded area within the lines represents acceptable values for $\mathbf{H_T}$ and $\mathbf{H_T}$

For vent configurations requiring more than two 90° elbows, the following formulas apply:

Formula 1: $H_T \leq 3.5V_T$
Formula 2: $H_T + V_T \leq 24.75$ feet

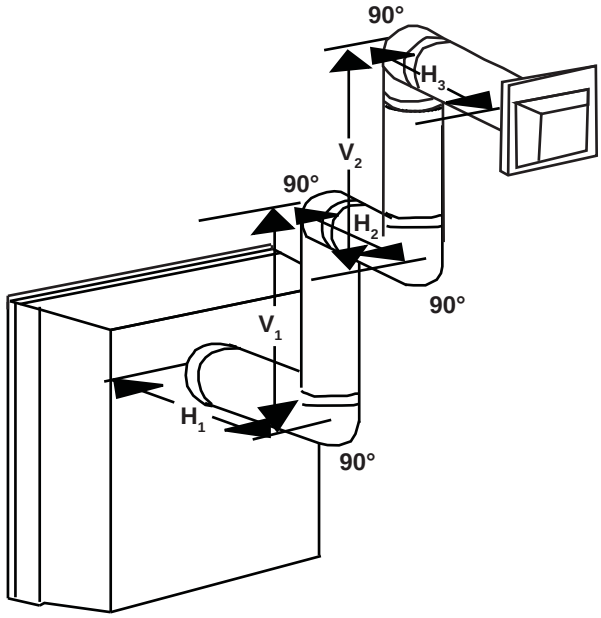

Example:
$\mathbf{V_1}$ = 4 FT
$\mathbf{V_2}$ = 1.5 FT
$\mathbf{V_T} = \mathbf{V_1} + \mathbf{V_2}$ = 4 + 1.5 = 5.5 FT
$\mathbf{H_1}$ = 2 FT
$\mathbf{H_2}$ = 1 FT
$\mathbf{H_3}$ = 1 FT
$\mathbf{H_4}$ = 1.5 FT
$\mathbf{H_R} = \mathbf{H_1} + \mathbf{H_2} + \mathbf{H_3} + \mathbf{H_4}$ = 2 + 1 + 1 + 1.5 = 5.5 FT
$\mathbf{H_O}$ = .03 (four 90° elbows + one 45° elbow - 90°)
= .03 (90 + 90 + 90 + 90 + 45 - 90) = 9.45 FT
$\mathbf{H_T} = \mathbf{H_R} + \mathbf{H_O}$ = 5.5 + 9.45 = 14.95 FT
$\mathbf{H_T} + \mathbf{V_T}$ = 14.95 + 5.5 = 20.45 FT

Formula 1: $\mathbf{H_T \leq 3.5V_T}$
$\mathbf{3.5V_T}$ = 3.5 x 5.5 = 19.25 FT
14.95 ≤ 19.25
Formula 2: $\mathbf{H_T + V_T \leq 24.75}$ **FT**
20.45 ≤ 24.75
Since both formulas are met, this vent configuration is acceptable.

16.3_2A

3.10 TOP OR REAR EXIT VERTICAL TERMINATION

$(H_T) \leq (V_T)$

Simple venting configurations.

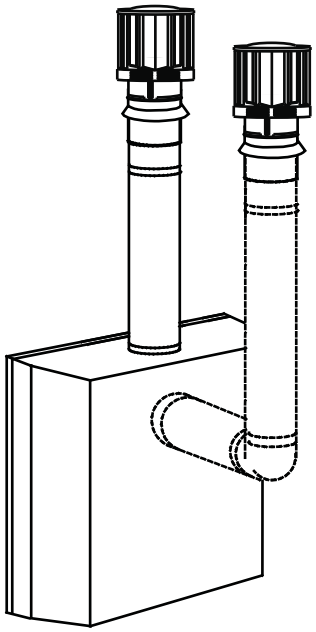

See graph to determine the required vertical rise $\mathbf{V_T}$ for the required horizontal run $\mathbf{H_T}$.

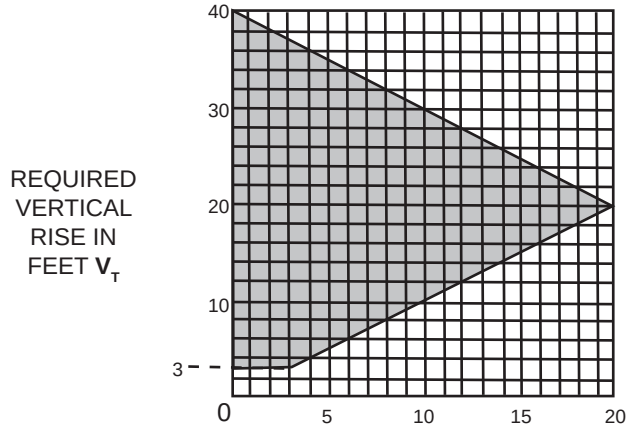

The shaded area within the lines represents acceptable values for $\mathbf{H_T}$ and $\mathbf{H_T}$

For vent configurations requiring one or more 90° elbows (top exit) or one or more 90° elbows (rear exit), the following formulas apply:

Formula 1: $H_T \leq V_T$
Formula 2: $H_T + V_T \leq 40$ feet

Example:
V_1 = 5 FT
V_2 = 6 FT
V_3 = 10 FT
$V_T = V_1 + V_2 + V_3 = 5 + 6 + 10 = 21$ FT
H_1 = 8 FT
H_2 = 2.5 FT
$H_R = H_1 + H_2 = 8 + 2.5 = 10.5$ FT
H_O = .03 (four 90° elbows - 90°)
= .03 (360° - 90°) = 8.1 FT
$H_T = H_R + H_O = 10.5 + 8.1 = 18.6$ FT
$H_T + V_T = 18.6 + 21 = 39.6$ FT

Formula 1: $H_T \leq 3.5\ V_T$
$18.6 \leq 21$
Formula 2: $H_T + V_T \leq 40$ FT
$39.6 \leq 40$
Since both formulas are met, this vent configuration is acceptable.

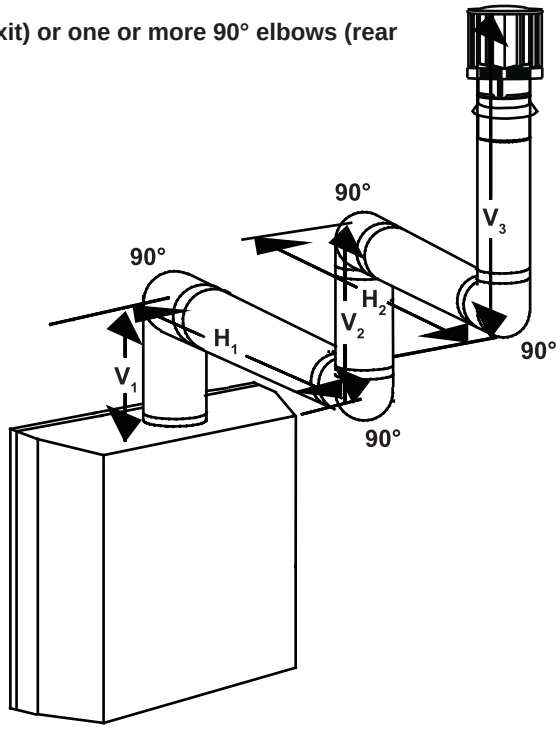

18.2

$(H_T) > (V_T)$

Simple venting configurations.

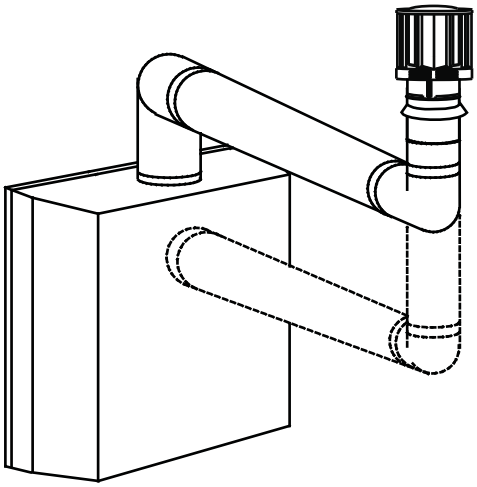

See graph to determine the required vertical rise $\mathbf{V_T}$ for the required horizontal run $\mathbf{H_T}$.

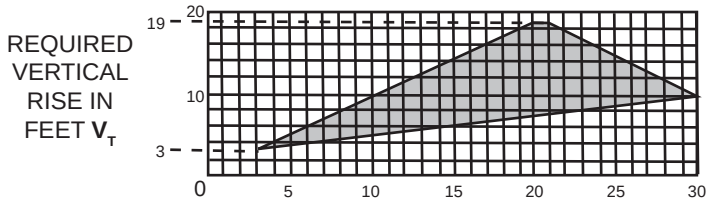

The shaded area within the lines represents acceptable values for $\mathbf{H_T}$ and $\mathbf{H_T}$

For vent configurations requiring more than two 90° elbows (top exit) or one 90° elbow (rear exit), the following formulas apply:

Formula 1: $H_T \leq 3\ V_T$
Formula 2: $H_T + V_T \leq 40$ feet

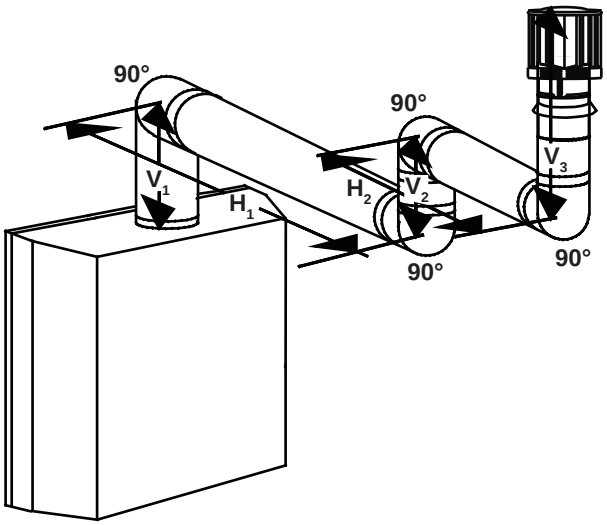

Example:
$\mathbf{V_1}$ = 2 FT
$\mathbf{V_2}$ = 1 FT
$\mathbf{V_3}$ = 1.5 FT
$\mathbf{V_T} = \mathbf{V_1} + \mathbf{V_2} + \mathbf{V_3}$ = 2 + 1 + 1.5 = 4.5 FT
$\mathbf{H_1}$ = 6 FT
$\mathbf{H_2}$ = 2 FT
$\mathbf{H_R} = \mathbf{H_1} + \mathbf{H_2}$ = 6 + 2 = 8 FT
$\mathbf{H_O}$ = .03 (four 90° elbows - 90°)
= .03 (360° - 90°) = 8.1 FT
$\mathbf{H_T} = \mathbf{H_R} + \mathbf{H_O}$ = 8 + 8.1 = 16.1 FT
$\mathbf{H_T} + \mathbf{V_T}$ = 16.1 + 4.5 = 20.6 FT

Formula 1: $\mathbf{H_T \leq 3.5\ V_T}$
$\mathbf{3.5\ V_T}$ = 3 x 4.5 = 13.5 FT
16.1 ≤ 13.5

Since this formula is not met, this vent configuration is **<u>un</u>acceptable.**

Formula 2: $\mathbf{H_T + V_T \leq 40\ FT}$
16.1 ≤ 13.5

Since only formula 2 is met, this vent configuration is unacceptable and a new fireplace location or vent configuration will need to be established to satisfy both formulas.

18.2_2A

Example:
V_1 = 1.5 FT
V_2 = 5 FT
$V_T = V_1 + V_2$ = 1.5 + 1 + 5 = 6.5 FT
H_1 = 1 FT
H_2 = 1 FT
H_3 = 10.75 FT
$H_R = H_1 + H_2 + H_3$ = 1 + 1 + 10.75 = 12.75 FT
H_O = .03 (four 90° elbows + one 45° elbow - 90°)
= .03 (360° + 45° - 90°) = 6.75 FT
$H_T = H_R + H_O$ = 12.75 + 6.75 = 19.5 FT
$H_T + V_T$ = 19.5 + 6.5 = 26 FT

Formula 1:
$H_T \leq 3\ V_T$
$3\ V_T$ = 3 x 6.5 = 19.5 FT
19.5 = 19.5

Formula 2:
$H_T + V_T \leq 40$ **FT**
26 ≤ 40

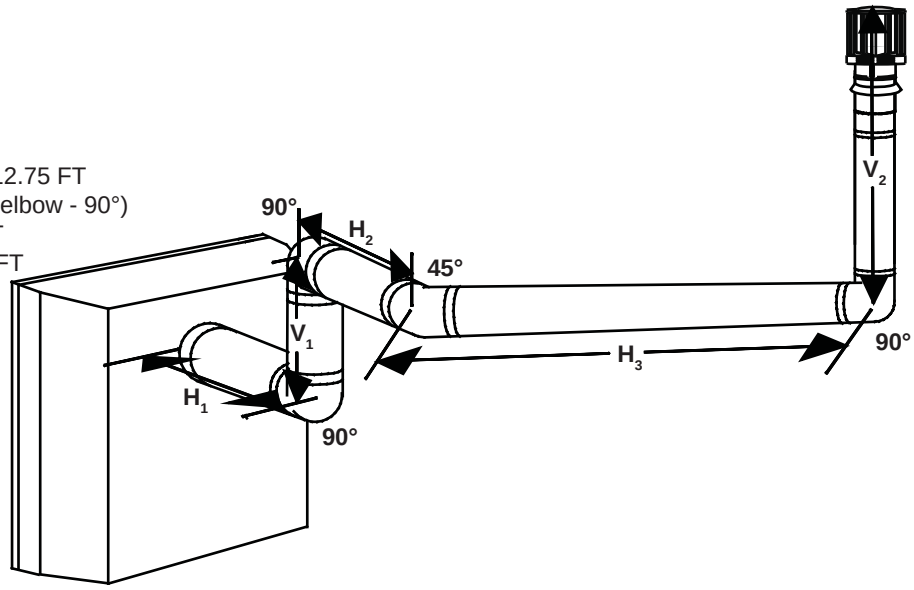

Since both formulas are met, this vent configuration is acceptable.

18.2_3

3.11 VERTICAL THROUGH EXISTING CHIMNEY

⚠ WARNING

RISK OF FIRE!

CO-AXIAL TO CO-LINEAR VENTING CONFIGURATIONS MUST ONLY BE USED IN A NON-COMBUSTIBLE CHIMNEY OR ENCLOSURE. INSTALLATION IN A COMBUSTIBLE ENCLOSURE COULD RESULT IN A FIRE.

This appliance is designed to be attached to a 3” co-linear aluminum flex vent system running the full length of a masonry chimney.

The flex liners accommodate any contours of a masonry chimney, however, it is necessary to keep the flexible liners as straight as possible. The inlet air collar of the termination cap must be connected to the air intake flex liner and the exhaust collar must be connected to the exhaust flexible liner.

Both Simpson Duravent and Selkirk co-linear to co-axial adaptors have been approved on this appliance (**NOTE: A vent adaptor will be required directly off the appliance**). Follow vent manufacturer’s installation instructions.

Different manufacturer’s venting components must not be combined. Once the preferred manufacturer’s appliance adaptor has been attached, the remainder of the system must be that of the same manufacturer.

The only exception to this rule is to use Wolf Steel’s approved 3” flex liner and co-linear termination.

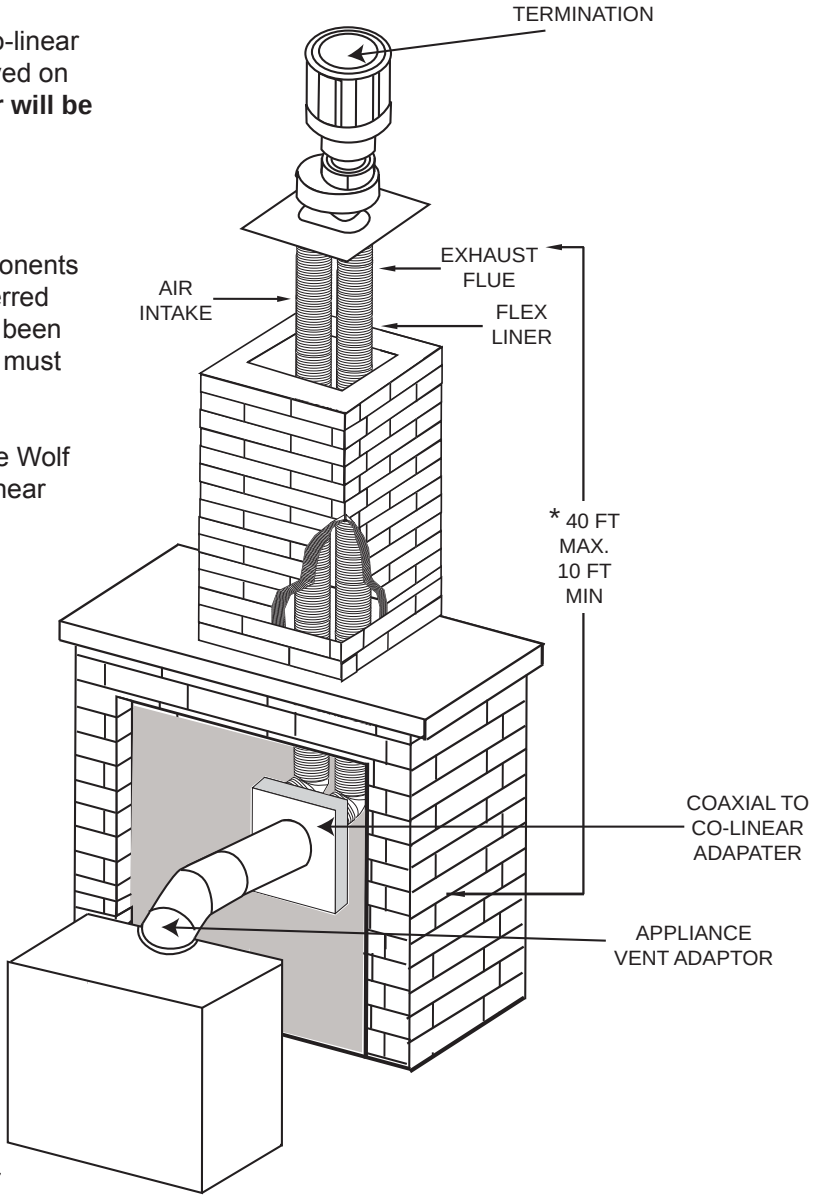

* Measured from appliance flue collar to termination flue collar

Obadiah's · 406-300-1776

3.12 REAR VENT CONVERSION

In order to convert the venting configuration from a top exit to a rear exit, remove components as illustrated: When reinstalling in the alternate position: Check gaskets for tears, replace if necessary to ensure a proper seal.

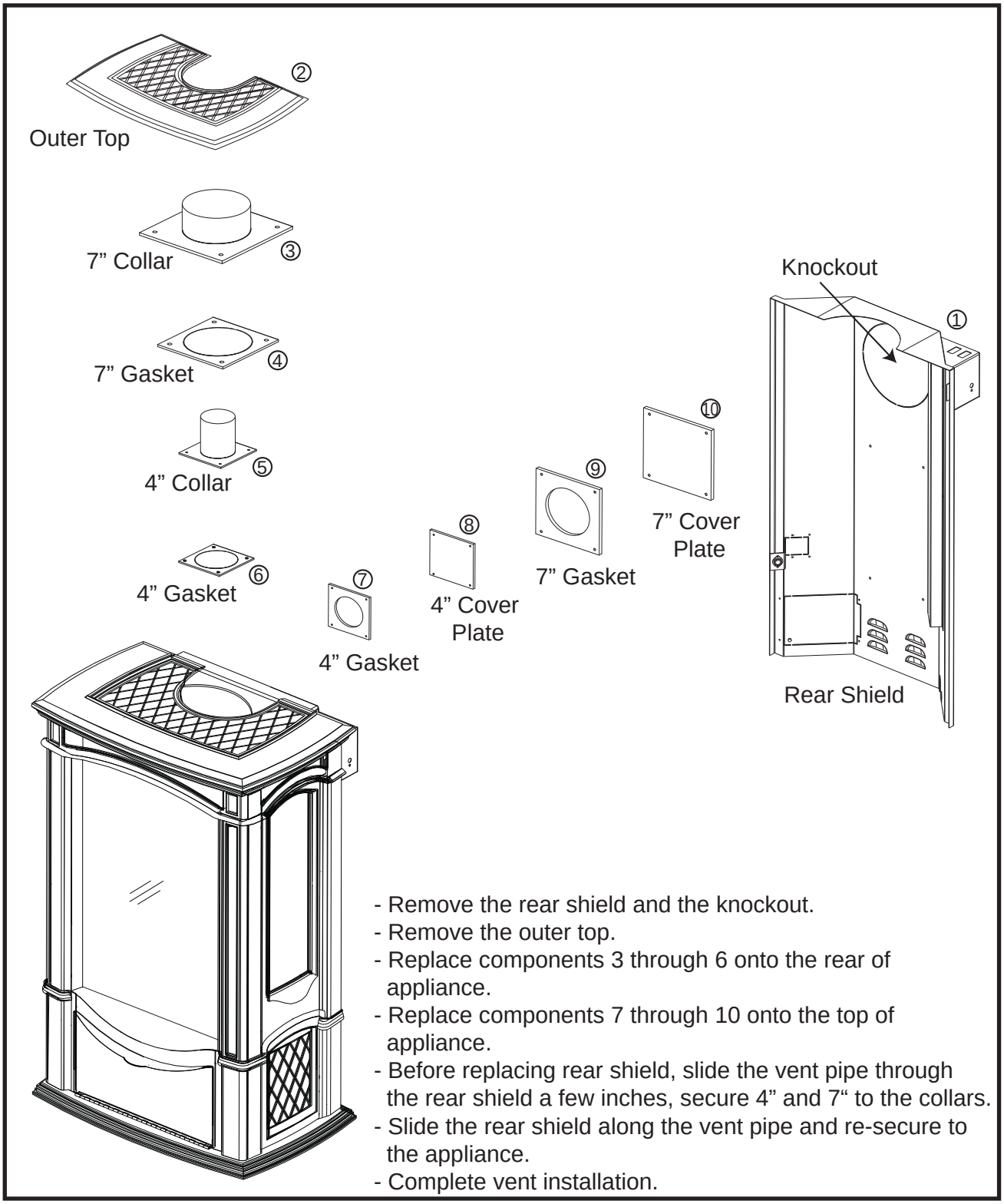

4.0 INSTALLATION

⚠ WARNING

FOR SAFE AND PROPER OPERATION OF THE APPLIANCE, FOLLOW THE VENTING INSTRUCTIONS EXACTLY.

ALL INNER EXHAUST AND OUTER INTAKE VENT PIPE JOINTS MAY BE SEALED USING EITHER RED RTV HIGH TEMP SILICONE SEALANT W573-0002 (NOT SUPPLIED) OR BLACK HIGH TEMP MILL PAC W573-0007 (NOT SUPPLIED) WITH THE EXCEPTION OF THE APPLIANCE EXHAUST FLUE COLLAR WHICH MUST BE SEALED USING MILL PAC.

IF USING PIPE CLAMPS TO CONNECT VENT COMPONENTS, 3 SCREWS MUST ALSO BE USED TO ENSURE THE CONNECTION CANNOT SLIP OFF.

DO NOT CLAMP THE FLEXIBLE VENT PIPE.

RISK OF FIRE, EXPLOSION OR ASPHYXIATION. IMPROPER SUPPORT OF THE ENTIRE VENTING SYSTEM MAY ALLOW VENT TO SAG AND SEPARATE. USE VENT RUN SUPPORTS AND CONNECT VENT SECTIONS PER INSTALLATION INSTRUCTIONS.

RISK OF FIRE, DO NOT ALLOW LOOSE MATERIALS OR INSULATION TO TOUCH THE VENT PIPE. REMOVE INSULATION TO ALLOW FOR THE INSTALLATION OF THE ATTIC SHIELD AND TO MAINTAIN CLEARANCES TO COMBUSTIBLES.

68.2A

4.1 WALL AND CEILING PROTECTION

⚠ WARNING

DO NOT FILL THE SPACE BETWEEN THE VENT PIPE AND ENCLOSURE WITH ANY TYPE OF MATERIAL. DO NOT PACK INSULATION OR COMBUSTIBLES BETWEEN CEILING FIRESTOPS. ALWAYS MAINTAIN SPECIFIED CLEARANCES AROUND VENTING AND FIRESTOP SYSTEMS. INSTALL WALL SHIELDS AND FIRESTOPS AS SPECIFIED. FAILURE TO KEEP INSULATION OR OTHER MATERIALS AWAY FROM VENT PIPE MAY CAUSE FIRE.

70.1

For clearances to combustible materials from the vent pipe, see “FRAMING” section.

For optimum performance it is recommended that horizontal runs have a minimum 1" per rise per foot when using Simpson Dura-Vent, Selkirk Direct Temp, American Metal Amerivent, or Wolf Steel rigid or flexible vent components.

4.1.1 HORIZONTAL INSTALLATION

⚠ WARNING

THE FIRESTOP ASSEMBLY MUST BE INSTALLED WITH THE VENT SHIELD TO THE TOP.

TERMINALS MUST NOT BE RECESSED INTO A WALL OR SIDING MORE THAN THE DEPTH OF THE RETURN FLANGE OF THE MOUNTING PLATE.

This application occurs when venting through an exterior wall. Having determined the correct height for the air terminal location, cut and frame a hole in the exterior wall as illustrated to accommodate the firestop assembly. Dry fit the firestop assembly before proceeding to ensure the brackets on the rear surface fit to the inside surface of the horizontal framing.

The length of the vent shield may be cut shorter for combustible walls that are less than 8 1/2" thick but the vent shield must extend the full depth of the combustible wall.

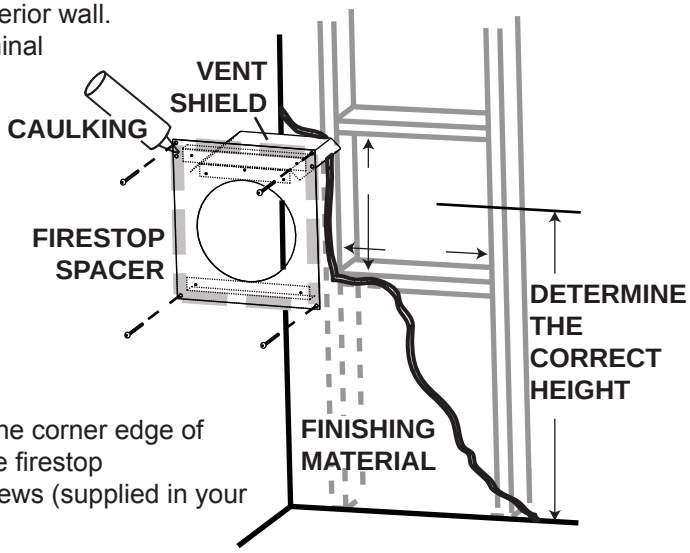

A. Apply a bead of caulking (not supplied) around the corner edge of the inside surface of the firestop assembly, fit the firestop assembly to the hole and secure using the 4 screws (supplied in your manual baggie).

B. Once the vent pipe is installed in its final position, apply high temperature sealant W573-0007 (not supplied) between the pipe and the firestop.

20.2

4.1.2 VERTICAL INSTALLATION

This application occurs when venting through a roof. Installation kits for various roof pitches are available from your authorized dealer / distributor. See accessories to order specific kits required.

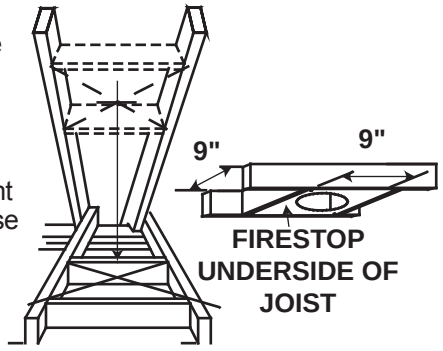

A. Determine the air terminal location, cut and frame a square opening as illustrated in the ceiling and the roof to provide the minimum 1" clearance between the vent pipe and any combustible material. Try to center the vent pipe location midway between two joists to prevent having to cut them. Use a plumb bob to line up the center of the openings. A vent pipe shield will prevent any materials such as insulation, from filling up the 1" air space around the pipe. Nail headers between the joist for extra support.

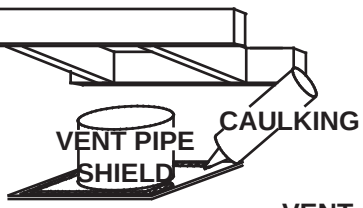

B. Apply a bead of caulking (not supplied) to the framework or to the Wolf Steel vent pipe shield plate or equivalent (in the case of a finished ceiling), and secure over the opening in the ceiling. A firestop must be placed on the bottom of each framed opening in a roof or ceiling that the venting system passes through. Apply a bead of caulking all around and place a firestop spacer over the vent shield to restrict cold air from being drawn into the room or around the fireplace. Ensure that both spacer and shield maintain the required clearance to combustibles. Once the vent pipe is installed in its final position, apply sealant between the pipe and the firestop assembly.

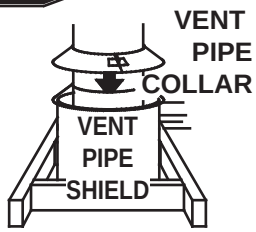

C. In the attic, slide the vent pipe collar down to cover up the open end of the shield and tighten. This will prevent any materials, such as insulation, from filling up the 1" air space around the pipe.

21.1

4.1.3 APPLIANCE VENT CONNECTION

A. Attach the adjustable pipe to the last section of rigid pipe. Secure with screws and seal.

B. Install the inner flex pipe to the appliance. Secure with 3 screws and flat washers. Seal the joint and screw holes using the high temperature sealant W573-0007 (not supplied).

C. Run a bead of high temperature sealant (not supplied) around the inside of the air intake collar. Pull the adjustable pipe a minimum 2” into the air intake collar.

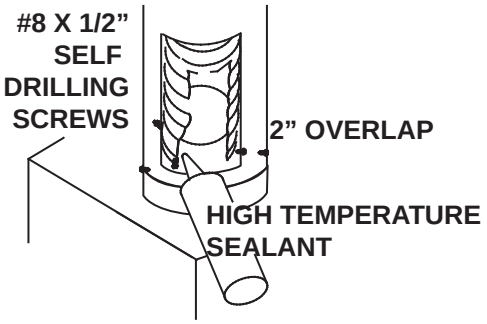

<u>NOTE:</u> Ensure that the sealant is not visible on the exterior pipes once installation is completed. An optional decorative black band is available for this use. In the event that the venting must be disassembled, care must be taken to reseal the venting.

28.3

4.1.4 HORIZONTAL AIR TERMINAL INSTALLATION

⚠ WARNING

TERMINALS MUST NOT BE RECESSED INTO A WALL OR SIDING MORE THAN THE DEPTH OF THE RETURN FLANGE OF THE MOUNTING PLATE.

DO NOT ALLOW THE INNER FLEX PIPE TO BUNCH UP ON HORIZONTAL OR VERTICAL RUNS AND ELBOWS. KEEP IT PULLED TIGHT.

SPACERS ARE ATTACHED TO THE INNER FLEX AT PREDETERMINED INTERVALS TO MAINTAIN AN EVEN AIR GAP TO THE OUTER FLEX PIPE. THIS GAP IS REQUIRED FOR SAFE OPERATION. A SPACER IS REQUIRED AT THE START, MIDDLE, AND END OF EACH ELBOW TO ENSURE THIS GAP IS MAINTAINED. THESE SPACERS MUST NOT BE REMOVED.

All 4" flexible vent pipe and 7" rigid vent pipe joints must be sealed using either high temperature sealant W573-0002 (not supplied) or the high temperature sealant W573-0007 Mill Pac (not supplied). However, the high temperature sealant W573-0007 Mill Pac (not supplied) must be used on the joint connecting the 4" flexible vent pipe and the exhaust flue collar.

A. Stretch the inner flex pipe to the required length taking into account the additional length needed for the finished wall surface. Slip the vent pipe a minimum of 2” over the inner sleeve of the air terminal and secure with 3 #8 screws. Apply a heavy bead of the high temperature sealant W573-0007 Mill Pac (not supplied).

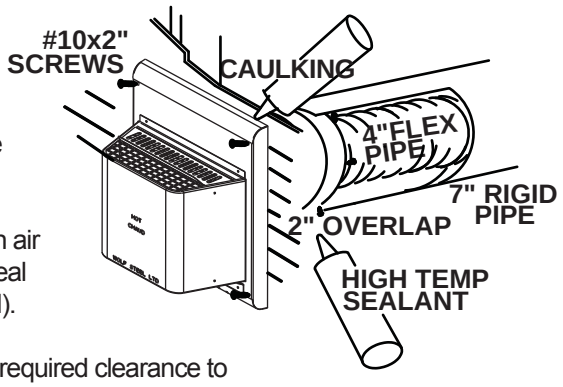

B. Using the outer rigid pipe, slide over the outer combustion air sleeve of the air terminal and secure with 3 #8 screws. Seal using high temperature sealant W573-0002 (not supplied).

C. Insert the vent pipes through the firestop maintaining the required clearance to combustibles. Holding the air terminal (lettering in an upright, readable position), secure to the exterior wall and make weather tight by sealing with caulking (not supplied).

D. From inside the house, using silicone, seal between the vent pipe and the firestop. Then slide the black trim collar over the vent pipe up to the firestop.

E. If more vent pipe needs to be used to reach the appliance, couple them together as illustrated. The vent system must be supported approximately every 3 feet for both vertical and horizontal runs. Use noncombustible strapping to maintain the minimum clearance to combustibles.

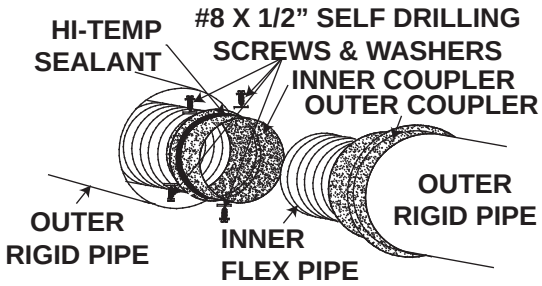

The air terminal mounting plate may be recessed into the exterior wall or siding no greater than the depth of its return flange.

23.7A

4.1.5 EXTENDED HORIZONTAL AND CORNER TERMINAL INSTALLATION

A 45° corner installation can have 0” rise between the appliance combustion air collar and the air terminal. In this case, vent lengths must be kept to a maximum of 24”. For longer vent lengths, a minimum vertical rise of 24” is required.

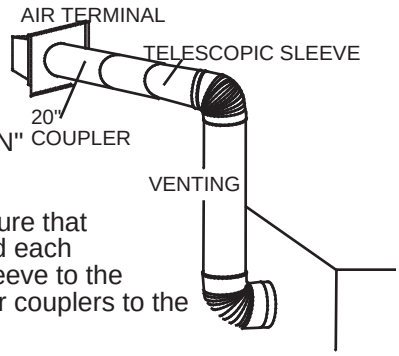

A. Follow the instructions for "HORIZONTAL AIR TERMINAL INSTALLATION" section.

B. Continue adding components alternating inner and outer vent pipes. Ensure that all inner vent pipes and elbows have sufficient vent spacers attached and each component is securely fastened to the one prior. Attach the telescopic sleeve to the vent run. Secure and seal. To facilitate completion, attach inner and outer couplers to the air terminal.

C. Install the air terminal. See “HORIZONTAL AIR TERMINAL INSTALLATION” section. Extend the outer telescopic sleeve; connect to the air terminal assembly. Fasten with self tapping screws and seal.

48.2

4.1.6 VERTICAL AIR TERMINAL INSTALLATION

⚠ WARNING

MAINTAIN A MINIMUM 2” SPACE BETWEEN THE AIR INLET BASE AND THE STORM COLLAR.

A. Fasten the roof support to the roof using the screws provided. The roof support is optional. In this case the venting is to be adequately supported using either an alternate method suitable to the authority having jurisdiction or the optional roof support.

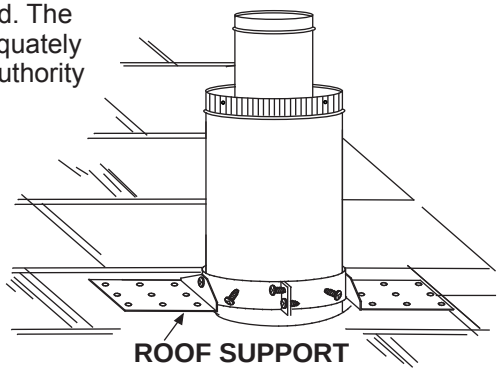

B. Stretch the inner flex pipe to the required length. Slip the inner flex pipe a minimum of 2” over the inner pipe of the air terminal connector and secure with 3 #8 screws. Seal using a heavy bead of high temperature sealant W573-0007 (not supplied).

C. Repeat using the outer flex pipe, using a heavy bead of high temperature sealant W573-0002 (not supplied).

D. Thread the air terminal connector / vent pipe assembly down through the roof. The air terminal must be positioned vertically and plumb. Attach the air terminal connector to the roof support, ensuring that the top of the air terminal is 16” above the highest point that it penetrates the roof.

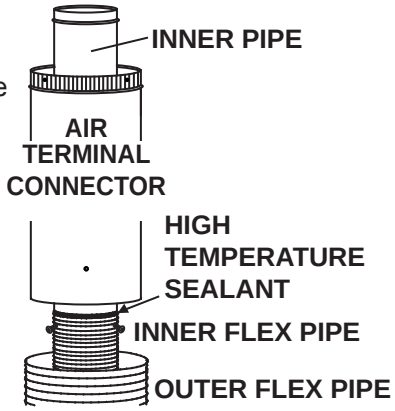

E. Remove nails from the shingles, above and to the sides of the air terminal connector. Place the flashing over the air terminal connector leaving a min. 3/4” of the air terminal connector showing above the top of the flashing. Slide the flashing underneath the sides and upper edge of the shingles. Ensure that the air terminal connector is properly centred within the flashing, giving a 3/4” margin all around. Fasten to the roof. Do not nail through the lower portion of the flashing. Make weather-tight by sealing with caulking. Where possible, cover the sides and top edges of the flashing with roofing material.

F. Aligning the seams of the terminal and air terminal connector, place the terminal over the air terminal connector making sure the vent pipe goes into the hole in the terminal. Secure with the three screws provided.

G. Apply a heavy bead of weatherproof caulking 2” above the flashing. Install the storm collar around the air terminal and slide down to the caulking. Tighten to ensure that a weather-tight seal between the air terminal and the collar is achieved.

H. If more vent pipe needs to be used to reach the appliance see “HORIZONTAL AIR TERMINAL INSTALLATION” section.

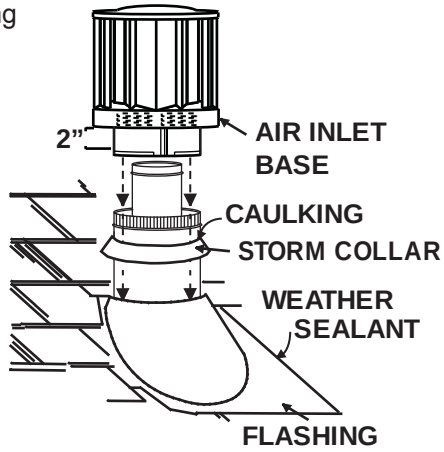

24.1

4.2 MOBILE HOME INSTALLATION

This appliance is certified to be installed as an OEM (Original Equipment Manufacturer) installation in a manufactured home or mobile home and must be installed in accordance with the manufacturer's instructions and the Manufactured Home Construction and Safety Standard, Title 24 CFR, Part 3280, in the United States or the Mobile Home Standard, CAN/CSA Z240 MH Series, in Canada. This appliance is only for use with the type(s) of gas indicated on the rating plate. A conversion kit is supplied with the mobile home appliance.

This Mobile/Manufactured Home Listed appliance comes factory equipped with a means to secure the unit. Built in appliances are equipped with 1/4" diameter holes located in the front left and right corners of the base. Use #10 hex head screws, inserted through the holes in the base to secure. For free standing products contact your local authorized dealer / distributor for the appropriate securing kit. For mobile home installations, the appliance must be fastened in place. It is recommended that the appliance be secured in all installations. Always turn off the pilot and the fuel supply at the source, prior to moving the mobile home. After moving the mobile home and prior to lighting the appliance, ensure that the logs are positioned correctly.

This appliance is certified to be installed in an aftermarket permanently located, manufactured (mobile) home, where not prohibited by local codes.
This appliance is only for use with the type of gas indicated on the rating plate. This appliance is not convertible for use with other gases, unless a certified kit is used.

Conversion Kits
This appliance is field convertible between Natural Gas (NG) and Propane (LP).
To convert from one gas to another consult your Authorized dealer/distributor.

29.1

4.3 GAS INSTALLATION

⚠ WARNING
RISK OF FIRE, EXPLOSION OR ASPHYXIATION. ENSURE THERE ARE NO IGNITION SOURCES SUCH AS SPARKS OR OPEN FLAMES.
SUPPORT GAS CONTROL WHEN ATTACHING GAS SUPPLY PIPE TO PREVENT DAMAGING GAS LINE.
ALWAYS LIGHT THE PILOT WHETHER FOR THE FIRST TIME OR IF THE GAS SUPPLY HAS RUN OUT WITH THE GLASS DOOR OPENED OR REMOVED. PURGING OF THE GAS SUPPLY LINE SHOULD BE PERFORMED BY A QUALIFIED SERVICE TECHNICIAN. ASSURE THAT A CONTINUOUS GAS FLOW IS AT THE BURNER BEFORE CLOSING THE DOOR. ENSURE ADEQUATE VENTILATION. FOR GAS AND ELECTRICAL LOCATIONS, SEE "DIMENSION" SECTION.
ALL GAS CONNECTIONS MUST BE CONTAINED WITHIN THE APPLIANCE WHEN COMPLETE.
HIGH PRESSURE WILL DAMAGE VALVE. DISCONNECT GAS SUPPLY PIPING BEFORE TESTING GAS LINE AT TEST PRESSURES ABOVE 1/2 PSIG.
VALVE SETTINGS HAVE BEEN FACTORY SET, DO NOT CHANGE.

Installation and servicing to be done by a qualified installer.

A. Move the appliance into position and secure.

B. If equipped with a flex connector the appliance is designed to accept a 1/2" gas supply. Without the connector it is designed to accept a 3/8" gas supply. The appliance is equipped with a manual shut off valve to turn off the gas supply to the appliance.

C. Connect the gas supply in accordance to local codes. In the absence of local codes, install to the current CAN/CSA-B149.1 Installation Code in Canada or to the current National Fuel Gas Code, ANSI Z223.1 / NFPA 54 in the United States.

D. When flexing any gas line, support the gas valve so that the lines are not bent or kinked.

E. The gas line flex-connector should be installed to provide sufficient movement for shifting the burner assembly on it's side to aid with servicing components.

F. Check for gas leaks by brushing on a soap and water solution. **Do not use open flame.**

30.1A

4.4 MINIMUM CLEARANCE TO COMBUSTIBLES

Minimum clearance to combustible construction from appliance and vent surfaces:

A - 2"
B - 5"
C - 2"

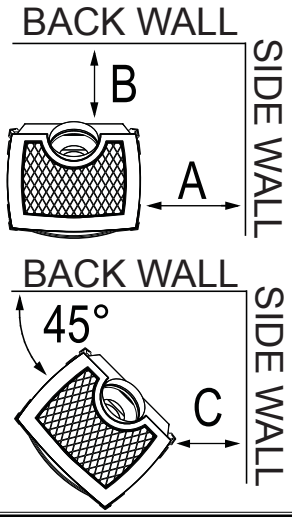

Combustible Framing:

- 1" to bottom and sides of the vent pipe*
- 2" to top of the vent pipe*

NOTE: Appliance should not be installed directly on carpeting.

Rear Exit:

- 47 1/2" to ceiling from base of the appliance

Top Exit:

- 51" to ceiling from base of the appliance**

*** HORIZONTAL VENT SECTIONS:**
A minimum clearance of 1" at the bottom and sides and 2" at the top of the vent pipe in all horizontal runs to combustibles is required. Use firestop spacer W010-1313 and shield W585-0240 (supplied).

*** VERTICAL VENT SECTIONS:**
A minimum of 1" all around the vent pipe on all vertical runs to combustibles is required. Use firestop spacer W010-1313 (supplied).

** For top vent vertical termination, see "REAR EXIT" for specific clearances.

At a distance of 2" from the wall, installation or service to the blower may not be practical. A minimum of 5" will be required in order to install or service the blower.

REAR EXIT

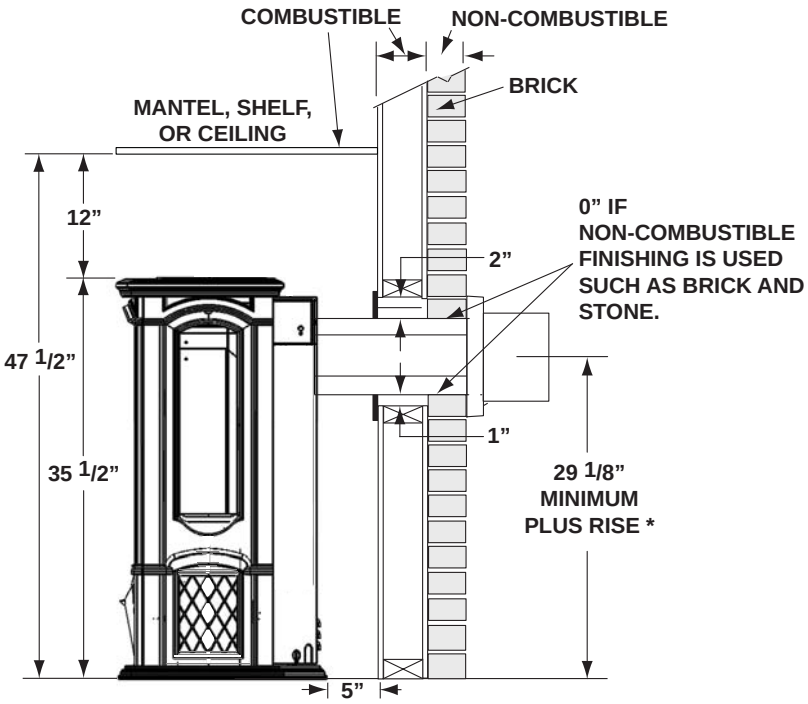

The appliance requires a minimum ceiling height of 47 1/2" for a rear vent. For temperature requirements, the space around and above the appliance must be left unobstructed.

TOP EXIT

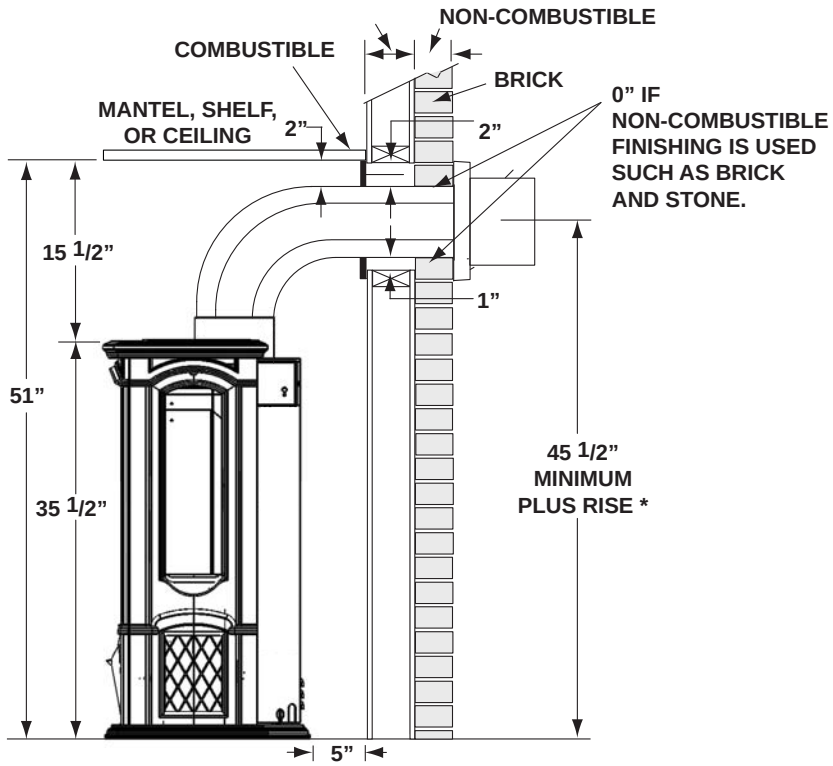

The appliance requires a minimum ceiling height of 51" for a top vent horizontal termination. For top vent vertical termination, see "REAR EXIT" for specific clearances. For temperature requirements, the space around and above the appliance must be left unobstructed.

5.0 ELECTRICAL CONNECTION

5.1 WIRING DIAGRAM

The main burner on/off switch and Night Light™ switch is located behind lower access panel. For ease of accessibility, optional remote wall switches may be installed in a convenient location for both burner and light operation.

The recommended maximum lead length depends on wire size:

WIRE SIZE	MAX. LENGTH
14 gauge	100 feet
16 gauge	60 feet
18 gauge	40 feet

Route 2-strand (solid core) wire through the electrical hole located at the bottom left side of the appliance. Connect the wires from the wall switch to the two corresponding spade connectors on the back of the on/off switches located behind the lower access panel.

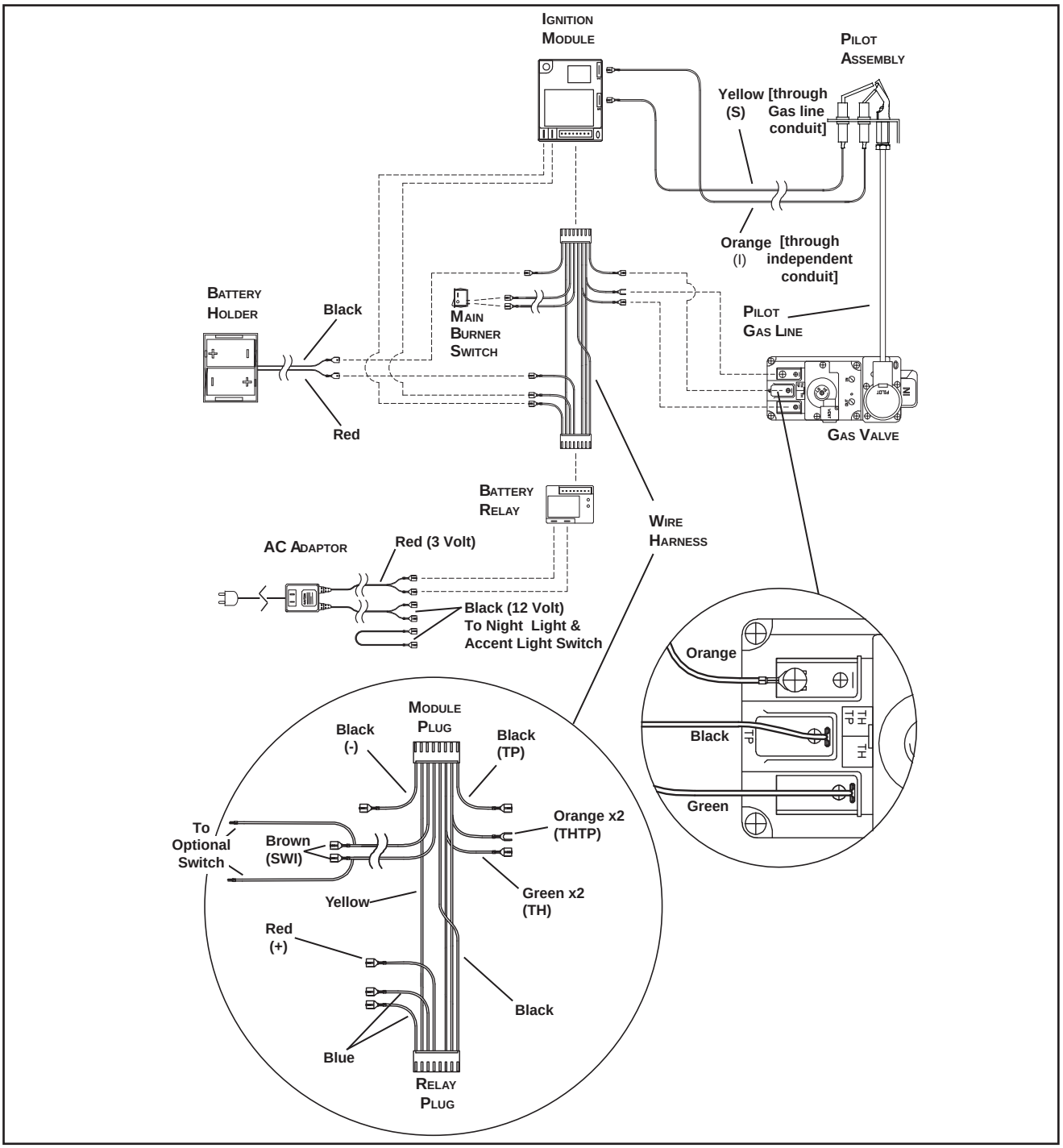

6.0 FINISHING

6.1 GLASS DOOR

REMOVAL:

- Before the glass door can be removed, the top cast must be removed and the bottom cast door opened.
- The glass door is secured to the top and front bottom edges of the firebox with four spring latches. Pull forward on the latches and away from the door to release.
- Slide the door forward off its support and lift straight up to remove.

INSTALLATION:

- Slide the door in between the cast front and appliance and rest the door on the door support, centred on the firebox opening.
- Engage all four spring handles.
- Replace cast top.

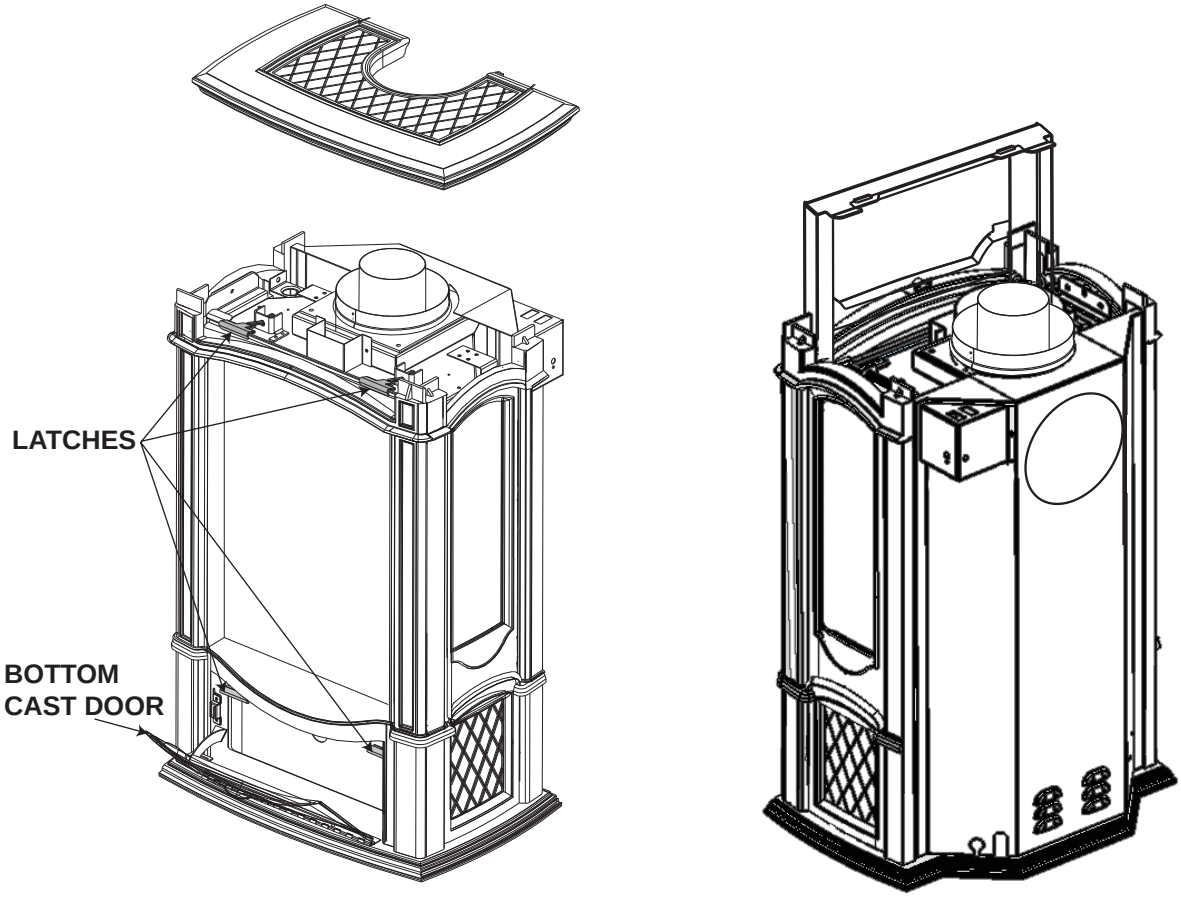

6.2 DOOR GLASS REPLACEMENT

⚠ WARNING

DO NOT USE SUBSTITUTE MATERIALS.

GLASS MAY BE HOT, DO NOT TOUCH GLASS UNTIL COOLED.

CARE MUST BE TAKEN WHEN REMOVING AND DISPOSING OF ANY BROKEN DOOR GLASS OR DAMAGED COMPONENTS. BE SURE TO VACUUM UP ANY BROKEN GLASS FROM INSIDE THE APPLIANCE BEFORE OPERATION.

DO NOT STRIKE, SLAM OR SCRATCH GLASS. DO NOT OPERATE APPLIANCE WITH GLASS REMOVED, CRACKED, BROKEN OR SCRATCHED.

A. Place the door frame face down careful not to scratch the paint.

B. Center the gasketed glass inside the door frame with the thick side of the gasket facing up.

C. Bend the glass retainers located along the edge of the door frame over the gasket holding the glass in place. Careful not to break the glass.

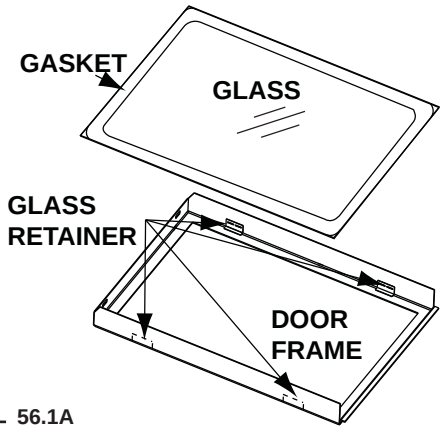

56.1A

6.3 LOG PLACEMENT

⚠ WARNING

FAILURE TO POSITION THE LOGS IN ACCORDANCE WITH THESE DIAGRAMS OR FAILURE TO USE ONLY LOGS SPECIFICALLY APPROVED WITH THIS APPLIANCE MAY RESULT IN PROPERTY DAMAGE OR PERSONAL INJURY.

LOGS MUST BE PLACED IN THEIR EXACT LOCATION IN THE APPLIANCE. DO NOT MODIFY THE PROPER LOG POSITIONS, SINCE APPLIANCE MAY NOT FUNCTION PROPERLY AND DELAYED IGNITION MAY OCCUR.

THE LOGS ARE FRAGILE AND SHOULD BE HANDLED WITH CARE.

76.1A

In order to assemble the log set, the glass door must be removed, see "GLASS DOOR INSTALLATION AND REMOVAL"section.

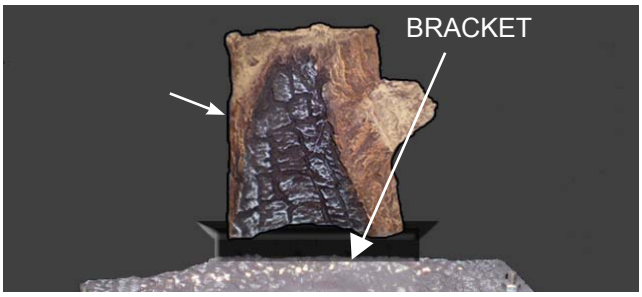

A. Place the rear log as shown, ensuring the holes on the underside are placed onto the 2 pins of the log support.

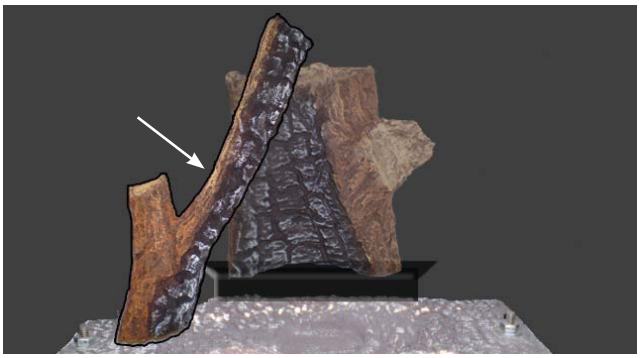

B. Place the left log as shown, ensuring the hole on the underside is placed onto the burner pin. This will rest on the left side of the rear log.

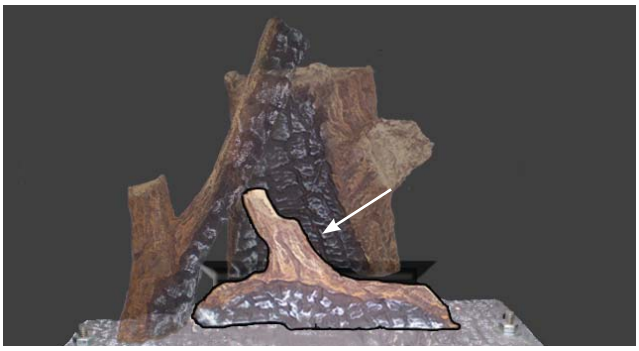

C. Place the center log as shown, follow contour of burner and ensure port holes are not covered.

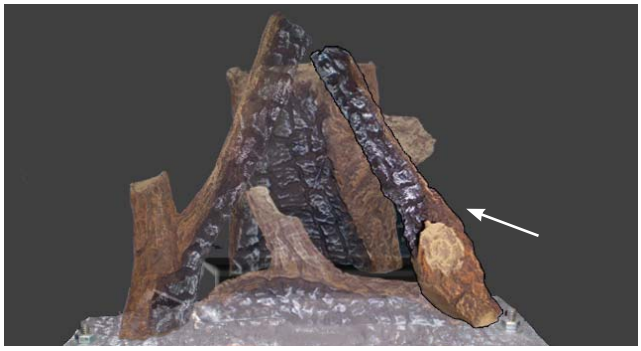

D. Place the hole in the underside of the right log onto the locating pin, on the burner base and rests against the rear log as shown.

E. Re-install the glass door.

6.4 CHARCOAL EMBERS

Randomly place the charcoal embers along the front and sides of the log support tray in a realistic manner.
Fine dust found in the bottom of the bag should not be used.
<u>NOTE:</u> Charcoal embers are not to be placed on the burner.

32.1

6.5 VERMICULITE

Sprinkle vermiculite around the charcoal embers.
NOTE: Vermiculite is not to be placed on the burner.

33.1

6.6 GLOWING EMBERS

Tear the embers into pieces and place along the burner ports covering all of the burner. Care should be taken to shred the embers into thin, small irregular pieces as only the exposed edges of the fibre hairs will glow. The ember material will only glow when exposed to direct flame; however, care should be taken to not block the burner ports.
Blocked burner ports can cause an incorrect flame pattern, carbon deposits and delayed ignition. Phazer™ logs glow when exposed to direct flame. Use only certified "glowing embers" and Phazer™ logs available from your Napoleon® dealer.

6.7 LOGO PLACEMENT

Remove the backing from the logo and position onto the control door as shown.

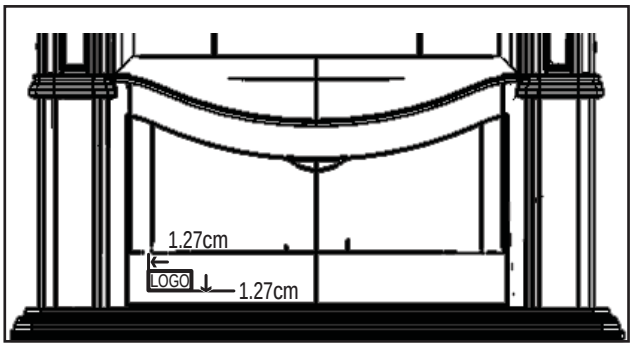

7.0 OPTIONAL BLOWER INSTALLATION

⚠ WARNING

RISK OF FIRE AND ELECTRICAL SHOCK.

TURN OFF THE GAS AND ELECTRICAL POWER BEFORE SERVICING THIS APPLIANCE.

USE ONLY WOLF STEEL APPROVED OPTIONAL ACCESSORIES AND REPLACEMENT PARTS WITH THIS APPLIANCE. USING NON-LISTED ACCESSORIES (BLOWERS, DOORS, LOUVRES, TRIMS, GAS COMPONENTS, VENTING COMPONENTS, ETC.) COULD RESULT IN A SAFETY HAZARD AND WILL VOID THE WARRANTY AND CERTIFICATION.

ENSURE THAT THE FAN'S POWER CORD IS NOT IN CONTACT WITH ANY SURFACE OF THE APPLIANCE TO PREVENT ELECTRICAL SHOCK OR FIRE DAMAGE. DO NOT RUN THE POWER CORD BENEATH THE APPLIANCE.

THE WIRE HARNESS PROVIDED IN THE BLOWER KIT IS A UNIVERSAL HARNESS. WHEN INSTALLED, ENSURE THAT ANY EXCESS WIRE IS CONTAINED, PREVENTING IT FROM MAKING CONTACT WITH MOVING OR HOT OBJECTS.

51.5

ELECTRICAL INSTALLATION TO BE DONE BY A QUALIFIED INSTALLER and must be connected and grounded in accordance with local codes. In the absence of local codes, use the current CSA C22.1 Canadian Electrical Code in Canada or the current ANSI/NFPA 70 National Electrical Code in the United States.

A. Break out the blower and thermal switch knock-outs from the rear panel.

B. Fish the wire extension through the blower knock-out as shown and connect to the prongs on the thermal switch.

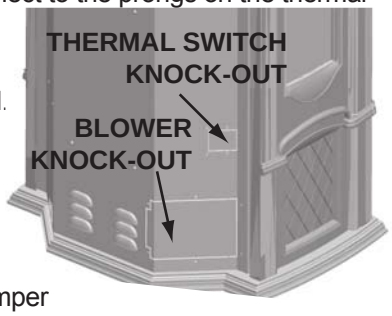

C. Ensure the thermal switch is touching the wall of the firebox. Secure the thermal switch assembly to the rear panel using 4 of # 8 screws supplied.

D. Connect the variable speed switch to the jumper wire (installed in the appliance) located just inside the larger knock out area.

E. Insert the blower assembly into the rear panel and secure using the remaining #8 screws supplied.

F. Remove the switch housing, connect the variable speed switch to the jumper wire and mount the switch to the side of the housing. Attach and secure the variable speed switch using the nut provided. Reinstall the switch housing. Install the variable speed switch knob.

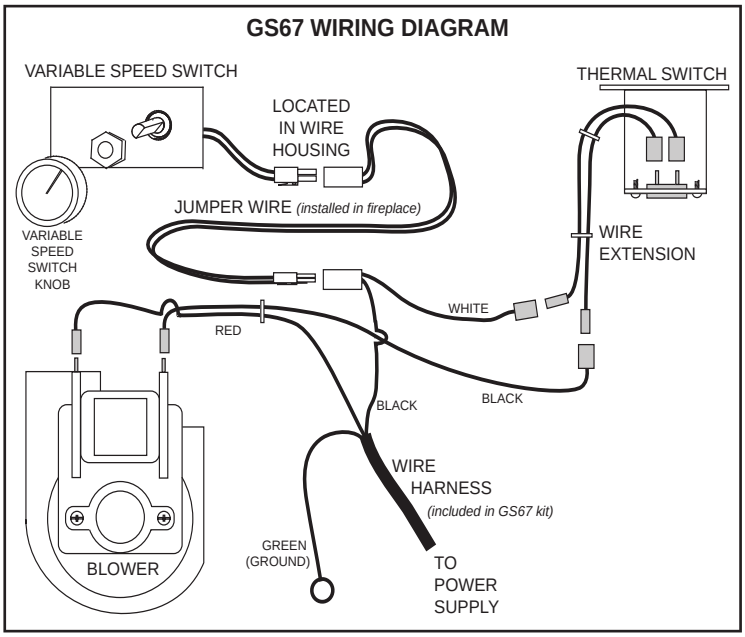

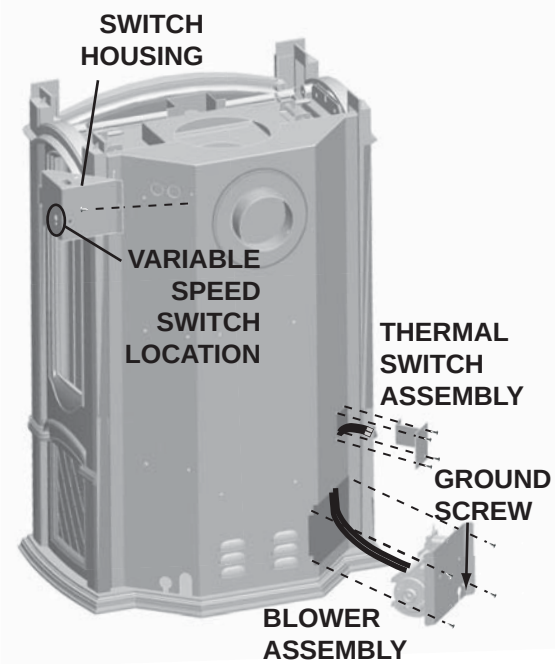

8.0 OPERATION

⚠ WARNING

IF YOU DO NOT FOLLOW THESE INSTRUCTIONS EXACTLY, A FIRE OR EXPLOSION MAY RESULT CAUSING PROPERTY DAMAGE, PERSONAL INJURY OR LOSS OF LIFE.

ALWAYS LIGHT THE PILOT WHETHER FOR THE FIRST TIME OR IF THE GAS SUPPLY HAS RUN OUT WITH THE GLASS DOOR OPENED OR REMOVED.

Ensure that a continuous gas flow is at the burner before installing the door. When lit for the first time, the appliance will emit an odor for a few hours. This is a normal temporary condition caused by the "burn-in" of paints and lubricants used in the manufacturing process and will not occur again. After extended periods of non-operation such as following a vacation or a warm weather season, the appliance may emit a slight odor for a few hours. This is caused by dust particles in the heat exchanger burning off. In both cases, open a window to sufficiently ventilate the room.

FOR YOUR SAFETY READ BEFORE LIGHTING:

A. This appliance is equipped with an ignition device which automatically lights he pilot. Do not try to light by hand.
B. Before operating smell all around the appliance area for gas and next to the floor because some gas is heavier than air and will settle on the floor.
C. Use only your hand to turn the gas control knob. Never use tools. If the knob will not turn by hand, do not try to repair it. Call a qualified service technician. Force or attempted repair may result in a fire or explosion.
D. Do not use this appliance if any part has been under water. Immediately call a qualified service technician to inspect the appliance and replace any part of the control system and any gas control which has been under water.

WHAT TO DO IF YOU SMELL GAS:

- Turn off all gas to the appliance.
- Open windows.
- Do not try to light any appliance.
- Do not touch any electric switch; do not use any phone in your building.
- Immediately call your gas supplier from a neighbor's phone. Follow the gas supplier's instructions.
- If you cannot reach your gas supplier, call the fire department.

LIGHTING INSTRUCTIONS:

1. Stop! Read the above safety information on this label.
2. Turn remote wall switch to off position.
3. Turn off all electrical power to the appliance and remove batteries.
4. This appliance is equipped with an ignition device which automatically lights the pilot. Do not try to light the pilot by hand.
5. Turn manual shutoff valve clockwise to off.
6. Open the glass door.
7. Wait five (5) minutes to clear out any gas. If you smell gas including near the floor, STOP! Follow “B” in the above safety information on this label. If you don’t smell gas go to the next step.
8. Close the glass door.
9. Turn manual shutoff valve counter-clockwise to on.
10. Turn on all electrical power to the appliance and re-install batteries.
11. Turn on remote wall switch to on position.
12. If appliance will not operate, follow instructions “TO TURN OFF GAS” and call your service technician or gas supplier.

Manual Shut-off Valve Shown in “OFF” position.

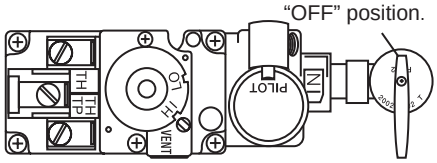

TO TURN OFF GAS

1. Turn off remote wall switch to the appliance.
2. Turn off all electrical power to the appliance if service is to be performed.
3. Turn manual shutoff valve clockwise to off. Do not force.

47.6

8.1 SWITCH FUNCTIONS

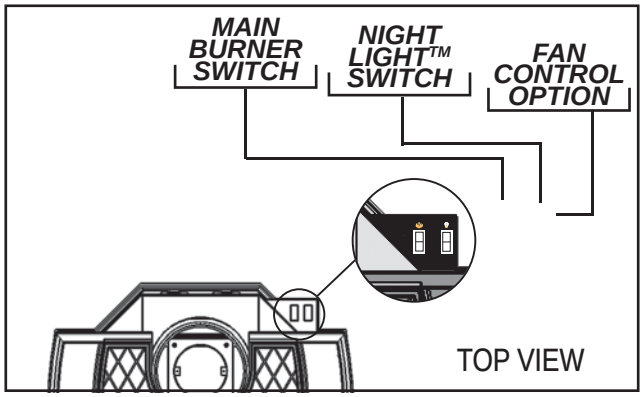

MAIN BURNER SWITCH
This switch turns the Main Burner on and off.

NIGHT LIGHT™ SWITCH
This switch turns the Night Light™ on and off.

FAN CONTROL OPTION
If installed this switch will turn on and off the power to the blower and control the fan speed. There is also a thermally activated switch that will only let the blower come on once the appliance has reached a comfortable temperature.

9.0 ADJUSTMENTS

9.1 PILOT INJECTOR AND ORIFICE REPLACEMENT

WARNING

THIS INSTALLATION SHOULD BE DONE BY A QUALIFIED INSTALLER AND SHALL BE IN COMPLIANCE WITH LOCAL CODES. IN THE ABSENCE OF LOCAL CODES, USE THE CURRENT CAN1-B149 INSTALLATION CODE IN CANADA, OR THE CURRENT NATIONAL FUEL GAS CODE ANSI Z223.1 IN THE UNITED STATES.

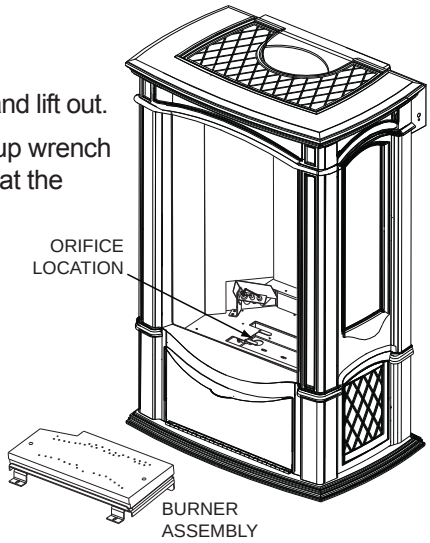

A. Turn off the electrical and gas supply to the appliance.

B. Remove the cast front, glass viewing door and log set.

C. Remove the 2 securing screws. Slide the burner assembly to the right and lift out.

D. Using a deep socket wrench, remove the main burner orifice. A back-up wrench must be used on the manifold, located below the housing to ensure that the aluminum tubing does not twist or kink. Replace the correct burner orifice using pipe thread compound.

E. Loosen nut and replace with appropriate injector

F. Reinstall the burner ensuring that the Venturi tube fits over the orifice. **<u>NOTE:</u> Check and adjust, if necessary, the primary air to 3/8" for propane and 3/16" for natural gas. Replace the screws.**

G. Turn on the gas supply and check for gas leaks by brushing on a soap and water solution.

DO NOT USE OPEN FLAME.

H. Replace the log set. Then light the pilot and main burner to ensure that the gas lines have been purged.

I. Replace the glass viewing door and cast front. Turn on the electrical supply to the appliance.

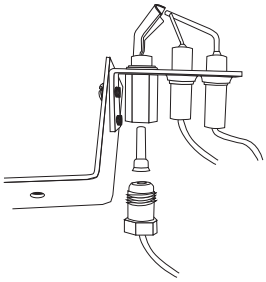

Purge all gas lines with the glass door removed. Assure that a continuous flow is at the burner before re-installing the door.

9.2 PRESSURE CHECK

<u>Check Pressure Readings:</u>

Inlet pressure can be checked by turning screw (A) counter-clockwise 2 or 3 turns and then placing pressure gauge tubing over the test point. Gauge should read 7" (minimum 4.5") water column for natural gas or 13" (11" minimum) water column for propane. Check with main burner operating on "HI".

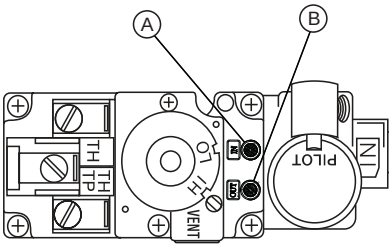

Outlet pressure can be checked the same as above using screw (B). Gauge should read 3.5" water column for natural gas or 10" water column for propane. Check with main burner operating on "HI".

AFTER TAKING PRESSURE READINGS, BE SURE TO TURN SCREWS CLOCKWISE FIRMLY TO RESEAL. DO NOT OVERTORQUE.

Leak test with a soap and water solution.

Obadiah's · 406-300-1776

9.3 FLAME CHARACTERISTICS

It's important to periodically perform a visual check of the pilot and burner flames. Compare them to the illustrations provided. If any flames appear abnormal call a service person.

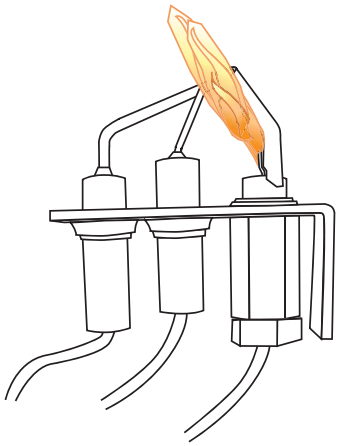

54.3

9.4 VENTURI ADJUSTMENT

This appliance has an air shutter that has been factory set open according to the chart below:

Regardless of venturi orientation, closing the air shutter will cause a more yellow flame, but can lead to carboning. Opening the air shutter will cause a more blue flame, but can cause flame lifting from the burner ports. The flame may not appear yellow immediately; allow 15 to 30 minutes for the final flame colour to be established.

AIR SHUTTER ADJUSTMENT MUST ONLY BE DONE BY A QUALIFIED INSTALLER!

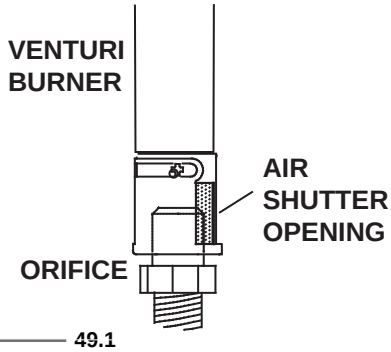

49.1

	GDS26
NG	3/16"
LP	3/8"

9.5 RESTRICTING VERTICAL VENTS

Vertical termination installations exiting either from the rear or the top flue collar of the appliance may display a very active flame. If this appearance is not desirable, the vent exit must be restricted to reduce the velocity of the exhaust gases, thus slowing down the flame pattern and creating a more traditional gentle appearance. Remove the baffle plate from the rear wall of the firebox, exposing the flue gas outlet opening. Superimpose this outlet hole with the smaller hole on the kit restrictor plate. Secure with the two screws provided and replace the baffle plate.

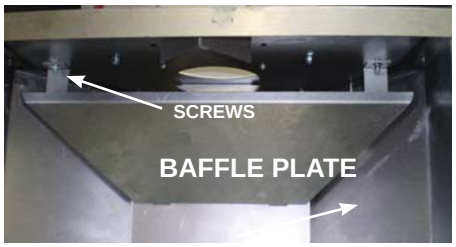

A. Remove the front and the door from the appliance.

B. Remove the screws securing the baffle plate. .
<u>NOTE:</u> The baffle rests on two screws that are attached to the back of the firebox.

C. Using the screws supplied, attach the restrictor plate as illustrated.

D. Replace the baffle.

10.0 MAINTENANCE

⚠ WARNING
TURN OFF THE GAS AND ELECTRICAL POWER BEFORE SERVICING THE APPLIANCE.
APPLIANCE MAY BE HOT, DO NOT SERVICE UNTIL APPLIANCE HAS COOLED.
DO NOT USE ABRASIVE CLEANERS.

CAUTION: Label all wires prior to disconnection when servicing controls. Wiring errors can cause improper and dangerous operation. Verify proper operation after servicing. This appliance and its venting system should be inspected before use and at least annually by a qualified service person. The appliance area must be kept clear and free of combustible materials, gasoline or other flammable vapors and liquids. The flow of combustion and ventilation air must not be obstructed.

A. In order to properly clean the burner and pilot assembly, remove the logs, rocks and/or glass to expose both assemblies.

B. Keep the control compartment, media, burner, air shutter opening and the area surrounding the logs clean by vacuuming or brushing, at least once a year.

C. Check to see that all burner ports are burning. Clean out any of the ports which may not be burning or are not burning properly.

D. Check to see that the pilot flame is large enough to engulf the flame sensor and/or thermocouple / thermopile as well as reaches the burner.

E. Replace the cleaned logs, rocks or glass. Failure to properly position the media may cause carboning which can be distributed in the surrounding living area.

F. Check to see that the main burner ignites completely on all openings when turned on. A 5 to 10 second total light-up period is satisfactory. If ignition takes longer, consult your local authorized dealer / distributor.

G. Check that the gasketing on the sides, top and bottom of the door is not broken or missing. Replace if necessary.

H. If for any reason the vent air intake system is disassembled, re-install and re-seal per the instructions provided for the initial installation.

10.1 NIGHT LIGHT™ REPLACEMENT

10.1.1 BULB REPLACEMENT

The GDS26 comes equipped with our “Night Light™”. If in the event the lamp or lens needs to be replaced, follow these instructions.

A. Turn off all electrical supply.

B. Remove the front and door from the firebox.

C. Unscrew the lens cover making sure the washer stays in place.
NOTE: Do not handle the lamp (bulb) with bare fingers, protect with a clean dry cloth.

D. The lamp will pull straight out of the socket. Replace with Wolf Steel Ltd. parts only (W387-0006), as lamp and lens are special "high temperature" products.

E. Replace lens with gasket, lens covers, attach wires to quick connects and replace the door when finished.
NOTE: The firebox must be sealed.

When re-assembling the light assembly, care must be taken. “Light Leakage” from above the cast doors may be noticed. The holes in the lamp housing are necessary for ventilation and must not be covered.

10.1.2 LENS ASSEMBLY INSTALLATION

A. Remove the door from the firebox.
B. Run the wires up through the lens hole.
C. Align key hole with lens assembly.
D. Snap into place.
E. Replace light shields, attach the wires and replace the door to the firebox.

10.1.3 LENS ASSEMBLY REPLACEMENT

A. Remove the front door and top shield from the firebox.
B. Compress the retainer fins in with a screw driver while pressing firmly on the top of the light assembly.
C. Once all the retainer fins are pushed in the lens assembly will snap out of place.

10.2 CARE OF GLASS

DO NOT CLEAN GLASS WHEN HOT! DO NOT USE ABRASIVE CLEANERS TO CLEAN GLASS.

Buff lightly with a clean dry soft cloth. Clean both sides of the glass after the first 10 hours of operation with a recommended fireplace glass cleaner. Thereafter clean as required. If the glass is not kept clean permanent discoloration and / or blemishes may result.

5.1

11.0 REPLACEMENTS

Contact your dealer or the factory for questions concerning prices and policies on replacement parts. Normally all parts can be ordered through your Authorized dealer / distributor.

FOR WARRANTY REPLACEMENT PARTS, A PHOTOCOPY OF THE ORIGINAL INVOICE WILL BE REQUIRED TO HONOUR THE CLAIM.

When ordering replacement parts always give the following information:

- Model & Serial Number of appliance
- Installation date of appliance
- Part number
- Description of part
- Finish

WARNING

FAILURE TO POSITION THE PARTS IN ACCORDANCE WITH THIS MANUAL OR FAILURE TO USE ONLY PARTS SPECIFICALLY APPROVED WITH THIS APPLIANCE MAY RESULT IN PROPERTY DAMAGE OR PERSONAL INJURY.

*** IDENTIFIES ITEMS WHICH ARE NOT ILLUSTRATED. FOR FURTHER INFORMATION, CONTACT YOUR AUTHORIZED DEALER.**

41.1

COMMON COMPONENTS		
REF NO.	**PART NO.**	**DESCRIPTION**
1	W135-0322	LOG #1- REAR
2	W135-0324	LOG #2 - RIGHT
3	W135-0323	LOG #3 - LEFT
4	W135-0325	LOG #4 - CENTER
5	GL-662	LOG SET
6	W725-0032	DEXEN VALVE - NG
6	W725-0049	DEXEN VALVE - LP
7	W010-1750	BURNER
8	W456-0042	#42 BURNER ORIFICE - NG
8	W456-0054	#54 BURNER ORIFICE - LP
9*	W455-0049	PILOT INJECTOR - LP
9*	W455-0071	PILOT INJECTOR - NG
10*	W720-0092	PILOT TUBE
11	W100-0069	PILOT ASSEMBLY - NG
11	W100-0093	PILOT ASSEMBLY - LP
12*	W385-0334	NAPOLEON® LOGO
13*	W660-0009	ON/OFF SWITCH
14*	W387-0009	HALOGEN BULB 5W
15*	W387-0010	LAMP, 5 WATT 12 VOLT
16	W135-0292**	CAST FRONT
17	W135-0291**	CAST SIDE (LEFT OR RIGHT) CAST
18	W135-0293**	CAST TOP
19*	W135-0294**	CAST CONTROL DOOR
20*	W135-0295**	CAST BASE
21	W010-2166	DOOR C/W GLASS AND GASKET
22*	W010-2180	GLASS AND GASKET
23	W430-0013	CONTROL DOOR MAGNET
24*	W361-0014	VERMICULITE

**FOR OTHER AVAILABLE COLOURS, ADD THESE LETTERS TO THE BASE PART NUMBER:

COLOR	LETTER	FINISH
MOSS GREEN	M	PORCELAIN
MAJOLICA BROWN	N	PORCELAIN
CRACKLE WHITE	W	PORCELAIN

TERMINAL KITS

REF NO.	PART NO.	DESCRIPTION
	GD-175 - WALL TERMINAL KIT	
25	BM6790	90° ELBOW - 7" DIAMETER
26	GD-222	TERMINAL ASSEMBLY
27	BM67ADJ	30" TO 53" ADJUSTABLE PIPE - 7" DIA
28	W010-1313	FIRESTOP SPACER
29	W585-0267	TOP VENT SHIELD
30*	W020-0032	HARDWARE
31	BR3730	BLACK TRIM COLLAR
32	BM6724	24" STOVE PIPE - 7" DIAMETER
33	W401-0001	10' FLEXIBLE VENT PIPE C/W SPACERS - 4" DIA
34	W025-0003	DECORATIVE METALLIC BLACK BAND
	GD-180 - PERISCOPE TERMINAL KIT	
25	BM6790	90° ELBOW - 7" DIAMETER
35	GD-201	PERISCOPE
27	BM67ADJ	30" TO 53" ADJUSTABLE PIPE - 7" DIA
28	W010-1313	FIRESTOP SPACER
29	W585-0267	TOP VENT SHIELD
30*	W020-0032	HARDWARE
31	BR3730	BLACK TRIM COLLAR
32	BM6724	24" STOVE PIPE - 7" DIAMETER
36	W010-0300	10' FLEXIBLE VENT PIPE C/W SPACERS - 4" DIA
34	W025-0003	DECORATIVE METALLIC BLACK BAND
	GD177 - TERMINAL VENT KIT	
26	GD-222	TERMINAL ASSEMBLY
31	BR3730	BLACK TRIM COLLAR
32	BM6724	24" STOVE PIPE - 7" DIAMETER
33	W401-0001	10' FLEXIBLE VENT PIPE C/W SPACERS - 4" DIA
37*	W020-0328	HARDWARE

ROOF TERMINAL KITS

REF NO.	PART NO.	DESCRIPTION
	GD-110 - 1/12 TO 7/12 PITCH	
38	W670-0006	AIR TERMINAL
39	W490-0073	4/7 INNER / OUTER SLEEVE
40	W010-0567	ROOF SUPPORT
41	W170-0063	STORM COLLAR
42	W263-0054	ROOF FLASHING
	GD-111 - 8/12 TO 12/12 PITCH	
38	W670-0006	AIR TERMINAL
39	W490-0073	4/7 INNER / OUTER SLEEVE
40	W010-0567	ROOF SUPPORT
41	W170-0063	STORM COLLAR
43	W263-0055	ROOF FLASHING
	GD-112 - FLAT ROOF	
38	W670-0006	AIR TERMINAL
39	W490-0073	4/7 INNER / OUTER SLEEVE
40	W010-0567	ROOF SUPPORT
41	W170-0063	STORM COLLAR
44	W263-0056	ROOF FLASHING

ACCESSORIES		
REF NO.	**PART NO.**	**DESCRIPTION**
45*	W690-0001	MILLIVOLT THERMOSTAT
46*	W660-0011B	REMOTE CONTROL - ADVANTAGE PLUS
47	GS67	BLOWER KIT
48*	W175-0268	CONVERSION KIT - NG TO LP
49*	W175-0269	CONVERSION KIT - LP TO NG
50	GD-301	HEAT GUARD
51*	W175-0001	4" COUPLER
51*	GS332S	STOVE TOP INSET - SOAPSTONE
51*	GS332F	STOVE TOP INSET - GRANITE - GREEN
51*	GS332N	STOVE TOP INSET - GRANITE - BROWN
51*	GS26S	STOVE SIDE INSET - SOAPSTONE
51*	GS26F	STOVE SIDE INSET - GRANITE - GREEN
51*	GS26N	STOVE SIDE INSET - GRANITE - BROWN
52*	PRP19	PORCELAIN REFLECTIVE RADIANT PANELS
53*	GD839KT	DECORATIVE BRICK/STONE PANELS

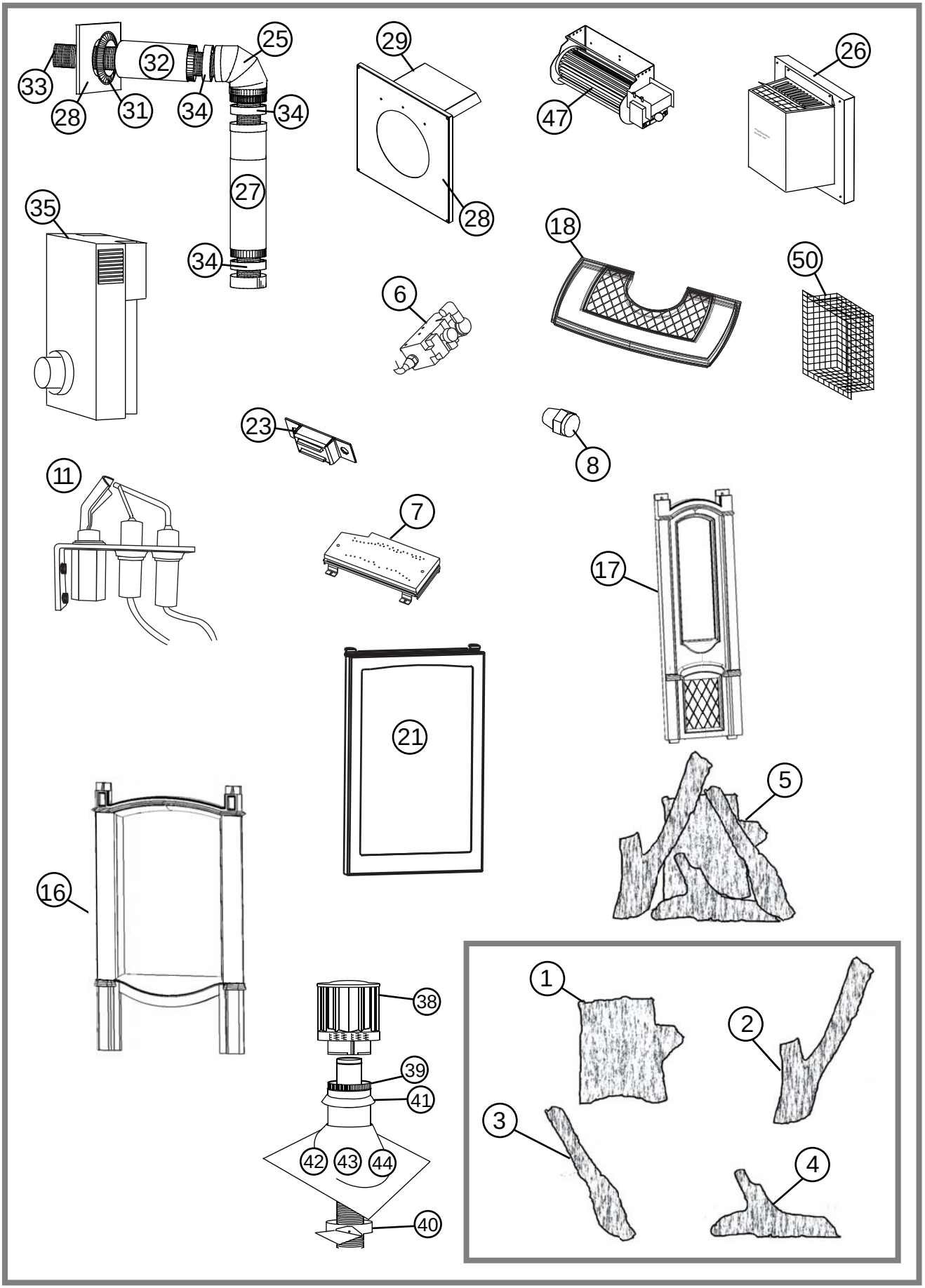
33
28
31
32
34
25
34
27
34
35
29
28
47
26
18
50
6
23
8
11
7
17
21
5
16
38
39
41
42
43
44
40
1
2
3
4

12.0 TROUBLESHOOTING

⚠ WARNING

ALWAYS LIGHT THE PILOT WHETHER FOR THE FIRST TIME OR IF THE GAS SUPPLY HAS RAN OUT, WITH THE GLASS DOOR OPEN OR REMOVED.

TURN OFF THE GAS AND ELECTRICAL POWER BEFORE SERVICING THE APPLIANCE.

APPLIANCE MAY BE HOT, DO NOT SERVICE UNTIL APPLIANCE HAS COOLED.

DO NOT USE ABRASIVE CLEANERS.

SYMPTOM	PROBLEM		TEST SOLUTION
Pilot will not light. Makes noise with no spark at pilot burner. 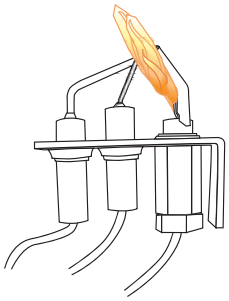	Wiring.	-	Verify the wire for the sensor and the wire for the ignitor are connected to the correct terminals (not reversed) on the module. **NOTE:** Sensor has 3/16" connection and ignitor has 1/8" connection.
	Loose connection.	-	Verify no loose connections, electrical shorts in the wiring or ground out to any metal object.
	Module.	-	Turn the ON/OFF switch to the "OFF" position. Remove the igniter wire from the module. Place the ON/OFF switch to the "ON" position. Hold a grounded wire about 3/16" away from the ignitor (spark) terminal on the module. If no spark the ignitor terminal module must be replaced. If there is a spark the ignitor terminal is fine. Inspect pilot assembly for a shorted wire or cracked insulator around the electrode.
	Igniter Spark gap is incorrect.	-	Spark gap of the ignitor to the pilot should be 1/8".
	Transformer.	-	Verify the transformer is installed and plugged into the module. Check voltage of the transformer under load at the spade connections on the module with the ON/OFF switch in the "ON" position. Acceptable readings of a good transformer are between 6.2 and 7.0 volts A.C.
	Battery backup (if power is off)	-	Check batteries.
	A shorted or loose Connection.	-	Remove and reinstall the wiring harness that plugs into the module. Remove and verify continuity of each wire in wiring harness.
	Improper switch wiring.	-	Troubleshoot the system with the simplest ON/OFF switch.
	Module is not grounded.	-	Verify the valve and pilot assemblies are properly grounded to the metal chassis of the appliance or log set.
Pilot sparks but will not light.	Gas supply.	-	Verify that the incoming gas line ball valve is "Open". Verify that the inlet pressure reading is within acceptable limits, inlet pressures must not exceed 14" W.C.
	Out of propane gas.	-	Fill the tank.

42.7

SYMPTOM	PROBLEM	TEST SOLUTION
Carbon is being deposited on glass, logs, rocks, media or combustion chamber surfaces.	Air shutter has become blocked.	- Ensure air shutter opening is free of lint or other obstructions.
	Flame is impinging on the glass, logs, rocks, media or combustion chamber.	- Check that the glass, logs, rocks or media are correctly positioned. - Open air shutter to increase the primary air. - Check the input rate: check the manifold pressure and orifice size as specified by the rating plate values. - Check that the door gasketing is not broken or missing and that the seal is tight. - Check that both vent liners are free of holes and well sealed at all joints. - Check that minimum rise per foot has been adhered to for any horizontal venting.
Continues to spark and pilot lights, but main burner will not light.	Short or loose connection in sensor rod.	- Verify all connections. Verify the connections from the pilot assembly are tight; also verify these connections are not grounding out to any metal.
	Poor flame rectification or contaminated sensor rod.	- Verify the flame is engulfing the sensor rod. This will increase the flame rectification. Verify correct pilot orifice is installed and inlet gas specifications to manual. (Remember, the flame carries the rectification current, not the gas. If the flame lifts from pilot hood, the circuit is broken. A wrong orifice or too high of an inlet pressure can cause the pilot flame to lift.) The sensor rod may need cleaning.
	Poor grounding between pilot assembly and gas valve.	- Verify that the wire harness is firmly connected to module Verify that the ceramic insulator around the sensor rod is not cracked, damaged, or loose. Verify the connection from the sensor rod to the sensor wire.
	Damaged pilot or dirty sensor rod.	- Clean sensor rod with an emery cloth to remove any contamination that may have accumulated on the sensor rod. Verify continuity with multimeter with ohms set at the lowest range.
Pilot lights Stops sparking / pilot remains lit but burner will not turn on.	Wiring / Connection.	- Inspect all wires, ensure good tight connections. Verify that all wiring is installed exactly as specified.
	Wiring harness.	- Inspect the wiring harness, and verify the harness is tightly connected to the module. Verify that all wires are connected in the right order. See “WIRING DIAGRAM” section.
Exhaust fumes smelled in room, headaches.	Appliance is spilling.	- Check all seals. - Check if exhaust is re-entering through an open door or window.

42.7_2

SYMPTOM	PROBLEM	TEST SOLUTION
White / grey film forms.	Sulphur from fuel is being deposited on glass, logs or combustion chamber surfaces.	- Clean the glass, see “CARE OF GLASS” section - **DO NOT CLEAN GLASS WHEN HOT.** - If deposits are not cleaned off regularly, the glass may become permanently marked.
Flames are very aggressive.	Door is ajar.	- Tighten door clamps if applicable.
	Venting action is too great.	- Restrict vent exit with restrictor plate. See “RESTRICTING VENTS” section if applicable.
Main burner flame is a blue, lazy, transparent flame.	Blockage in vent.	- Remove blockage. In really cold conditions, ice buildup may occur on the terminal and should be removed. To minimize this from happening again, it is recommended that the vent lengths that pass through unheated spaces (attics, garages, crawl spaces) be wrapped with an insulated mylar sleeve. Prevent sleeve from sagging. Contact your local authorized dealer for more information.
	Compromised venting.	- Check venting system parameters (seal, length, rise, etc.).
Main burner goes out: pilot goes out.	Vent recirculation.	- Check joint seals and installation.

42.7_3B

13.0 WARRANTY

NAPOLEON® products are manufactured under the strict Standard of the world recognized ISO 9001 : 2008 Quality Assurance Certificate.

NAPOLEON® products are designed with superior components and materials assembled by trained craftsmen who take great pride in their work. The burner and valve assembly are leak and test-fired at a quality test station. The complete appliance is again thoroughly inspected by a qualified technician before packaging to ensure that you, the customer, receives the quality product that you expect from NAPOLEON®.

NAPOLEON® GAS APPLIANCE PRESIDENT'S LIFETIME LIMITED WARRANTY

The following materials and workmanship in your new NAPOLEON® gas appliance are warranted against defects for as long as you own the appliance. This covers: combustion chamber, heat exchanger, stainless steel burner, phazer™ logs and embers, rocks, ceramic glass (thermal breakage only), gold plated parts against tarnishing, porcelainized enameled components and aluminum extrusion trims.*

Electrical (110V and millivolt) components and wearable parts such as blowers, gas valves, thermal switch, switches, wiring, remote controls, ignitor, gasketing, and pilot assembly are covered and NAPOLEON® will provide replacement parts free of charge during the first year of the limited warranty.*

Labour related to warranty repair is covered free of charge during the first year. Repair work, however, requires the prior approval of an authorized company official. Labour costs to the account of NAPOLEON® are based on a predetermined rate schedule and any repair work must be done through an authorized NAPOLEON® dealer.

* Construction of models vary. Warranty applies only to components included with your specific appliance.

CONDITIONS AND LIMITATIONS

NAPOLEON® warrants its products against manufacturing defects to the original purchaser only. Registering your warranty is not necessary. Simply provide your proof of purchase along with the model and serial number to make a warranty claim. NAPOLEON® reserves the right to have its representative inspect any product or part thereof prior to honouring any warranty claim. Provided that the purchase was made through an authorized NAPOLEON® dealer your appliance is subject to the following conditions and limitations:

Warranty coverage begins on the date of original installation.

This factory warranty is non-transferable and may not be extended whatsoever by any of our representatives.

The gas appliance must be installed by a licensed, authorized service technician or contractor. Installation must be done in accordance with the installation instructions included with the product and all local and national building and fire codes.

This limited warranty does not cover damages caused by misuse, lack of maintenance, accident, alterations, abuse or neglect and parts installed from other manufacturers will nullify this warranty.

This limited warranty further does not cover any scratches, dents, corrosion or discoloring caused by excessive heat, abrasive and chemical cleaners nor chipping on porcelain enamel parts, mechanical breakage of PHAZER™ logs and embers.

This warranty extends to the repair or replacement of warranted parts which are defective in material or workmanship provided that the product has been operated in accordance with the operation instructions and under normal conditions.

After the first year, with respect to this President's Lifetime Limited Warranty, NAPOLEON® may, at its discretion, fully discharge all obligations with respect to this warranty by refunding to the original warranted purchaser the wholesale price of any warranted but defective part(s).

NAPOLEON® will not be responsible for installation, labour or any other expenses related to the reinstallation of a warranted part and such expenses are not covered by this warranty.

Notwithstanding any provisions contained in the President's Lifetime Limited Warranty, NAPOLEON'S responsibility under this warranty is defined as above and it shall not in any event extend to any incidental, consequential or indirect damages.

This warranty defines the obligations and liability of NAPOLEON® with respect to the NAPOLEON® gas appliance and any other warranties expressed or implied with respect to this product, its components or accessories are excluded.

NAPOLEON® neither assumes, nor authorizes any third party to assume, on its behalf, any other liabilities with respect to the sale of this product.

NAPOLEON® will not be responsible for: over-firing, downdrafts, spillage caused by environmental conditions such as rooftops, buildings, nearby trees, hills, mountains, inadequate vents or ventilation, excessive venting configurations, insufficient makeup air, or negative air pressures which may or may not be caused by mechanical systems such as exhaust fans, furnaces, clothes dryers, etc.

Any damages to the appliance, combustion chamber, heat exchanger, plated trim or other components due to water, weather damage, long periods of dampness, condensation, damaging chemicals or cleaners will not be the responsibility of NAPOLEON®.

All parts replaced under the President's Limited Lifetime Warranty Policy are subject to a single claim.

During the first 10 years NAPOLEON® will replace or repair the defective parts covered by the lifetime warranty at our discretion free of charge. From 10 years to life, NAPOLEON® will provide replacement parts at 50% of the current retail price.

All parts replaced under the warranty will be covered for a period of 90 days from the date of their installation.

The manufacturer may require that defective parts or products be returned or that digital pictures be provided to support the claim. Returned products are to be shipped prepaid to the manufacturer for investigation. If a product is found to be defective, the manufacturer will repair or replace such defect.

Before shipping your appliance or defective components, your dealer must obtain an authorization number. Any merchandise shipped without authorization will be refused and returned to sender.

Shipping costs are not covered under this warranty.

Additional service fees may apply if you are seeking warranty service from a dealer.

Warranty labour allowance is only for the replacement of the warranted part. Travel, diagnostic tests, shipping and other related charges are not covered by this warranty.

ALL SPECIFICATIONS AND DESIGNS ARE SUBJECT TO CHANGE WITHOUT PRIOR NOTICE DUE TO ON-GOING PRODUCT IMPROVEMENTS. NAPOLEON® IS A REGISTERED TRADEMARK OF WOLF STEEL LTD.

Obadiah's · 406-300-1776

14.0 SERVICE HISTORY

Appliance Service History

This heater must be serviced annually depending on usage.

Date	Dealer Name	Service Technician Name	Service Performed	Special Concerns

15.0 NOTES

44.1

44.1