INSTALLER: LEAVE THIS MANUAL WITH THE APPLIANCE.
CONSUMER: RETAIN THIS MANUAL FOR FUTURE REFERENCE.

NAPOLEON®
QUALITY FIREPLACES
Award Winning Products

INSTALLATION AND OPERATING INSTRUCTIONS

CERTIFIED UNDER CANADIAN AND AMERICAN NATIONAL STANDARDS: CSA 2.33, ANSI Z21.88 FOR VENTED GAS FIREPLACE HEATERS.

HDX40NT
NATURAL GAS

HDX40PT
PROPANE

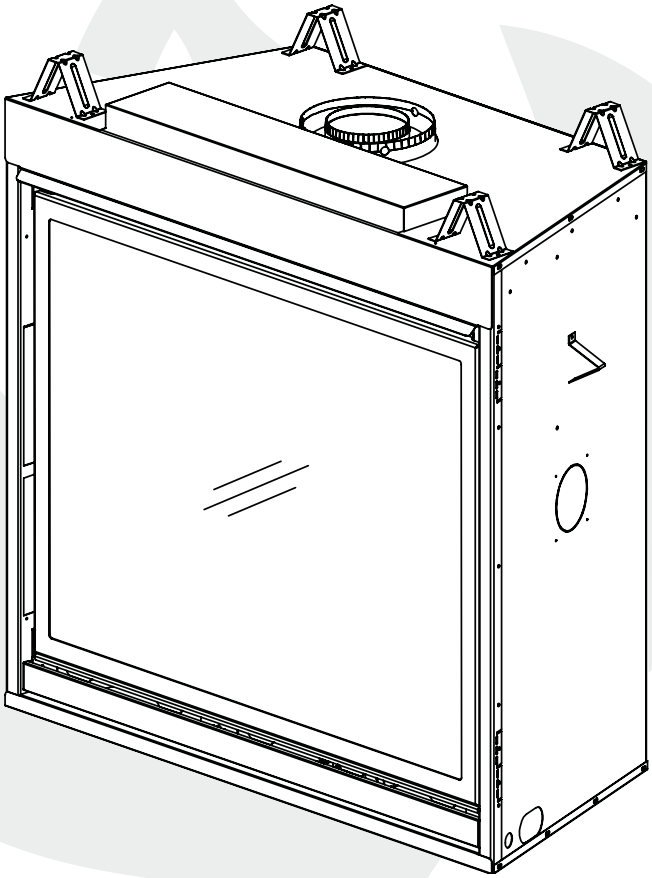

CERTIFIED FOR CANADA AND UNITED STATES USING ANSI/CSA METHODS.

SAFETY INFORMATION

⚠ WARNING

If the information in these instructions are not followed exactly, a fire or explosion may result causing property damage, personal injury or loss of life.

- Do not store or use gasoline or other flammable vapors and liquids in the vicinity of this or any other appliance.

- WHAT TO DO IF YOU SMELL GAS:

- **Do not try to light any appliance.**
- **Do not touch any electrical switch; do not use any phone in your building.**
- **Immediately call your gas supplier from a neighbour's phone. Follow the gas supplier's instructions.**
- **If you cannot reach your gas supplier, call the fire department.**

- Installation and service must be performed by a qualified installer, service agency or the supplier.

HPBA Hearth, Patio & Barbecue Association

Quality System Certified To ISO 9001-2008

APPLY SERIAL NUMBER LABEL FROM CARTON

Serial No. XXXXXX000000
MODEL NO.

Wolf Steel Ltd., 24 Napoleon Rd., Barrie, ON, L4M 4Y8 Canada /
103 Miller Drive, Crittenden, Kentucky, USA, 41030
Phone (705)721-1212 • Fax (705)722-6031 • www.napoleonfireplaces.com • ask@napoleonproducts.com

1.1A
$10.00

Obadiah's · 406-300-1776

TABLE OF CONTENTS

1.0	**INSTALLATION OVERVIEW**	**3**
2.0	**INTRODUCTION**	**4**
2.1	DIMENSIONS	5
2.2	GENERAL INSTRUCTIONS	5
2.3	GENERAL INFORMATION	6
2.4	RATING PLATE INFORMATION	7
3.0	**VENTING**	**8**
3.1	VENTING LENGTHS AND COMPONENTS	8
3.2	TYPICAL VENT INSTALLATIONS	10
3.3	SPECIAL VENT INSTALLATIONS	11
3.3.1	PERISCOPE TERMINATION	11
3.3.2	CORNER TERMINATION	11
3.4	VENT TERMINAL CLEARANCES	12
3.5	VENT APPLICATION FLOW CHART	13
3.6	DEFINITIONS	13
3.7	ELBOW VENT LENGTH VALUES	13
3.8	HORIZONTAL TERMINATION	14
3.9	VERTICAL TERMINATION	16
4.0	**INSTALLATION**	**18**
4.1	WALL AND CEILING PROTECTION	18
4.1.1	HORIZONTAL INSTALLATION	19
4.1.2	VERTICAL INSTALLATION	19
4.2	USING FLEXIBLE VENT COMPONENTS	20
4.2.1	HORIZONTAL AIR TERMINAL INSTALLATION	20
4.2.2	VERTICAL AIR TERMINAL INSTALLATION	21
4.3	MOBILE HOME	22
4.4	ACCESS PANEL FOR GAS LINE CONNECTION	22
4.5	GAS INSTALLATION	23
5.0	**FRAMING**	**24**
5.1	MINIMUM CLEARANCE TO COMBUSTIBLES	26
5.2	MINIMUM CLEARANCE TO COMBUSTIBLE ENCLOSURES	27
5.3	MINIMUM MANTEL CLEARANCES	29
6.0	**FINISHING**	**30**
6.1	DOOR REMOVAL / INSTALLATION	30
6.2	LOG PLACEMENT	31
6.3	GLOWING EMBER PLACEMENT	32
6.4	LAVA ROCK	32
6.5	OPTIONAL ROCK PLACEMENT	33
6.6	LOGO PLACEMENT	34
7.0	**OPTIONAL BLOWER INSTALLATION**	**35**
7.1	ACCESSING THE BLOWER	35
7.2	INSTALLING THE BLOWER	36
8.0	**WIRING DIAGRAM / ELECTRICAL INFORMATION**	**37**
8.1	WIRING REQUIREMENTS	37
8.2	OPTIONAL ACCESSORIES REQUIREMENTS	37
8.3	JUNCTION BOX INSTALLATION	38
8.4	WIRING DIAGRAM	39
9.0	**OPERATION**	**40**
10.0	**ADJUSTMENT**	**41**
10.1	PRESSURE ADJUSTMENT	41
10.2	VENTURI ADJUSTMENT	41
10.3	FLAME ADJUSTMENT	41
10.4	FLAME CHARACTERISTICS	42
11.0	**MAINTENANCE**	**42**
11.1	LAMP REPLACEMENT	43
11.2	DOOR GLASS REPLACEMENT	44
11.3	CARE OF GLASS	44
11.4	CARE OF PLATED PARTS	44
12.0	**REPLACEMENT PARTS**	**45**
13.0	**TROUBLESHOOTING**	**48**
14.0	**WARRANTY**	**50**
15.0	**SERVICE HISTORY**	**51**

NOTE: **Changes, other than editorial, are denoted by a vertical line in the margin.**

1.0 INSTALLATION OVERVIEW

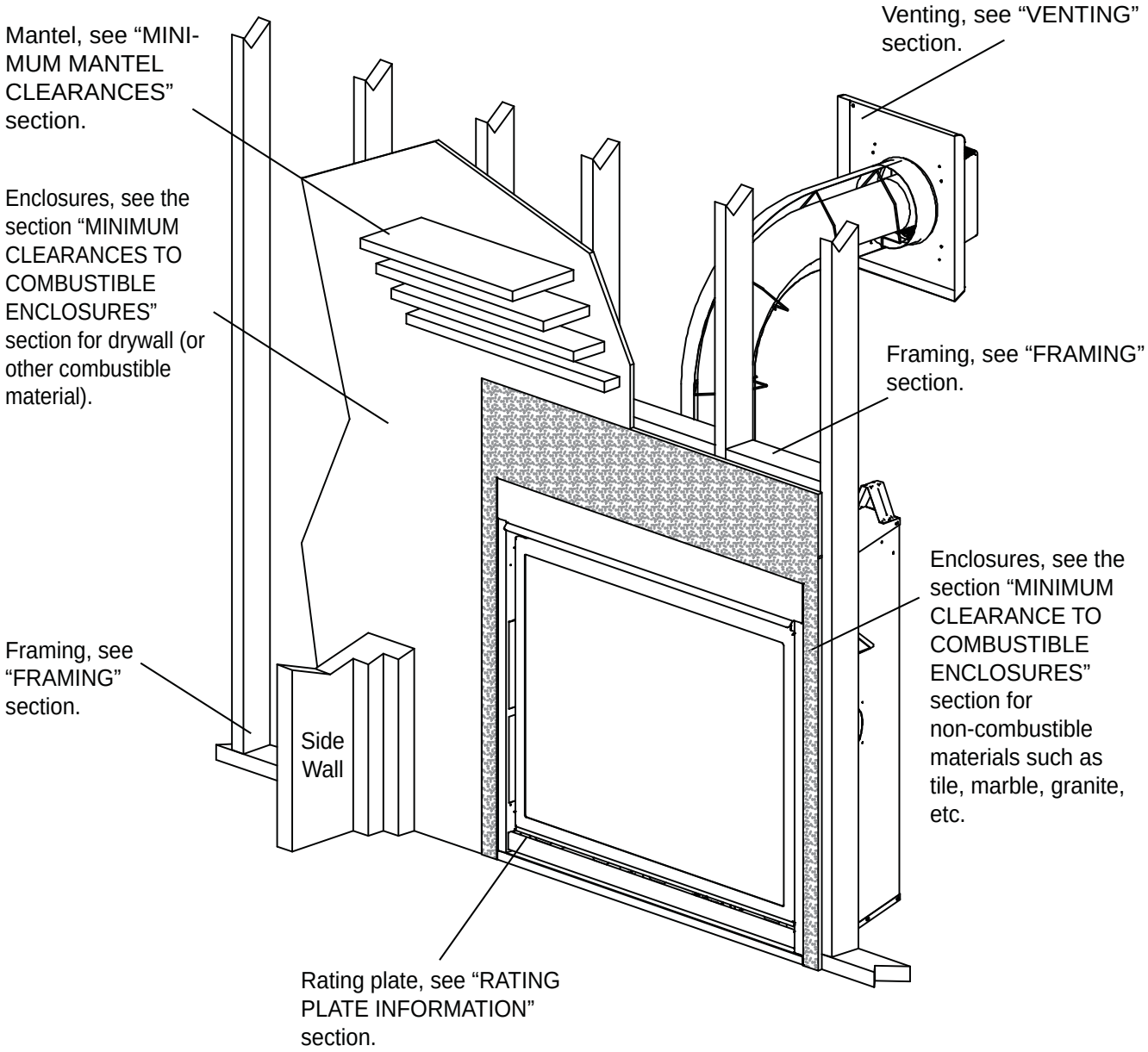

2.0 INTRODUCTION

⚠ WARNING

- **THIS APPLIANCE IS HOT WHEN OPERATED AND CAN CAUSE SEVERE BURNS IF CONTACTED.**
- Do not operate appliance before reading and understanding operating instructions. Failure to operate appliance according to operating instructions could cause fire or injury.
- Risk of fire or asphyxiation do not operate appliance with fixed glass removed.
- Do not connect 110 volts to the control valve.
- Risk of burns. The appliance should be turned off and cooled before servicing.
- Do not install damaged, incomplete or substitute components.
- Risk of cuts and abrasions. Wear protective gloves and safety glasses during installation. Sheet metal edges may be sharp.
- Do not burn wood or other materials in this appliance.
- Young children should be carefully supervised when they are in the same room as the appliance. Toddlers, young children and others may be susceptible to accidental contact burns. A physical barrier is recommended if there are at risk individuals in the house. To restrict access to an appliance or stove, install an adjustable safety gate to keep toddlers, young children and other at risk individuals out of the room and away from hot surfaces.
- Clothing or other flammable material should not be placed on or near the appliance.
- Due to high temperatures, the appliance should be located out of traffic and away from furniture and draperies.
- Ensure you have incorporated adequate safety measure to protect infants/toddlers from touching hot surfaces.
- Even after the appliance is out, the glass and/or screen will remain hot for an extended period of time.
- Check with your local hearth specialty dealer for safety screens and hearth guards to protect children from hot surfaces. These screens and guards must be fastened to the floor.
- Any safety screen or guard removed for servicing must be replaced prior to operating the appliance.
- It is imperative that the control compartments, burners and circulating blower and its passageway in the appliance and venting system are kept clean. The appliance and its venting system should be inspected before use and at least annually by a qualified service person. More frequent cleaning may be required due to excessive lint from carpeting, bedding material, etc. The appliance area must be kept clear and free from combustible materials, gasoline and other flammable vapors and liquids.
- Under no circumstances should this appliance be modified.
- This appliance must not be connected to a chimney flue pipe serving a separate solid fuel burning appliance.
- Do not use this appliance if any part has been under water. Immediately call a qualified service technician to inspect the appliance and to replace any part of the control system and any gas control which has been under water.
- Do not operate the appliance with the glass door removed, cracked or broken. Replacement of the glass should be done by a licensed or qualified service person.
- Do not strike or slam shut the appliance glass door.
- When equipped with pressure relief doors, they must be kept closed while the appliance is operating to prevent exhaust fumes containing carbon monoxide, from entering into the home. Temperatures of the exhaust escaping through these openings can also cause the surrounding combustible materials to overheat and catch fire.
- Only doors / optional fronts certified with the unit are to be installed on the appliance.
- Keep the packaging material out of reach of children and dispose of the material in a safe manner. As with all plastic bags, these are not toys and should be kept away from children and infants.
- As with any combustion appliance, we recommend having your appliance regularly inspected and serviced as well as having a Carbon Monoxide Detector installed in the same area to defend you and your family against Carbon Monoxide.
- Ensure clearances to combustibles are maintained when building a mantel or shelves above the appliance. Elevated temperatures on the wall or in the air above the appliance can cause melting, discolouration or damage of decorations, a T.V. or other electronic components.

3.2A

2.1 DIMENSIONS

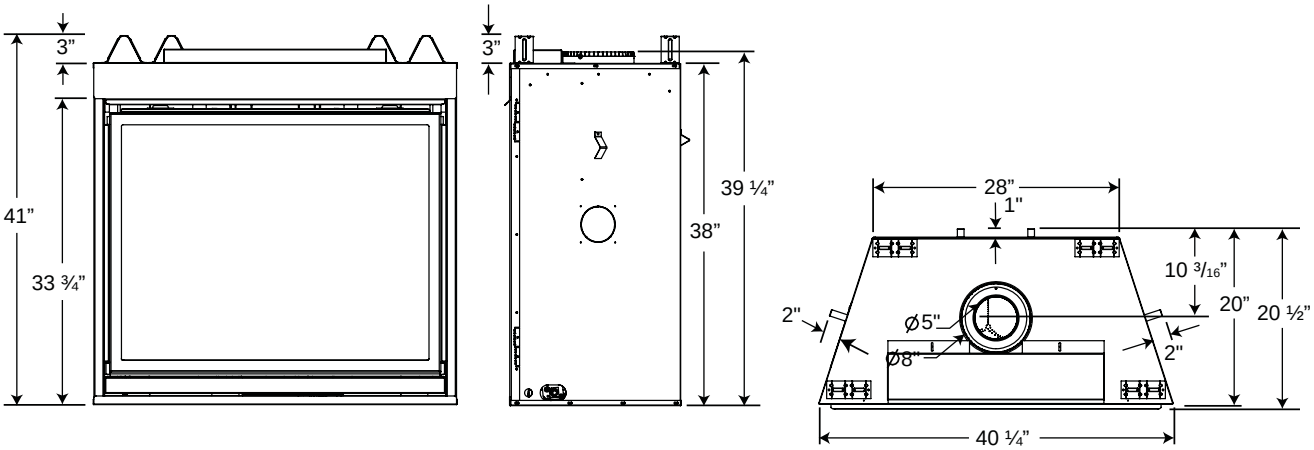

2.2 GENERAL INSTRUCTIONS

⚠ WARNING
ALWAYS LIGHT THE PILOT WHETHER FOR THE FIRST TIME OR IF THE GAS SUPPLY HAS RAN OUT, WITH THE GLASS DOOR OPENED OR REMOVED.
PROVIDE ADEQUATE CLEARANCE FOR SERVICING AND OPERATING THE APPLIANCE.
PROVIDE ADEQUATE VENTILATION.
NEVER OBSTRUCT THE FRONT OPENING OF THE APPLIANCE.
OBJECTS PLACED IN FRONT OF THE APPLIANCE MUST BE KEPT A MINIMUM OF 48” FROM THE FRONT FACE OF THE UNIT.
SURFACES AROUND AND ESPECIALLY ABOVE THE APPLIANCE CAN BECOME HOT. AVOID CONTACT WHEN THE APPLIANCE IS OPERATING.
FIRE RISK. EXPLOSION HAZARD.
HIGH PRESSURE WILL DAMAGE VALVE. DISCONNECT GAS SUPPLY PIPING BEFORE PRESSURE TESTING GAS LINE AT TEST PRESSURES ABOVE 1/2 PSIG. CLOSE THE MANUAL SHUT-OFF VALVE BEFORE PRESSURE TESTING GAS LINE AT TEST PRESSURES EQUAL TO OR LESS THAN 1/2 PSIG.
USE ONLY WOLF STEEL APPROVED OPTIONAL ACCESSORIES AND REPLACEMENT PARTS WITH THIS APPLIANCE. USING NON-LISTED ACCESSORIES (BLOWERS, DOORS, LOUVRES, TRIMS, GAS COMPONENTS, VENTING COMPONENTS, ETC.) COULD RESULT IN A SAFETY HAZARD AND WILL VOID THE WARRANTY AND CERTIFICATION.

THIS GAS APPLIANCE SHOULD BE INSTALLED AND SERVICED BY A QUALIFIED INSTALLER to conform with local codes. Installation practices vary from region to region and it is important to know the specifics that apply to your area, for example in Massachusetts State:

- This product must be installed by a licensed plumber or gas fitter when installed within the commonwealth of Massachusetts.
- The appliance damper must be removed or welded in the open position prior to installation of a appliance insert or gas log.
- The appliance off valve must be a “T” handle gas cock.
- The flexible connector must not be longer than 36 inches.
- A Carbon Monoxide detector is required in all rooms containing gas fired appliances.
- The appliance is not approved for installation in a bedroom or bathroom unless the unit is a direct vent sealed combustion product.

The installation must conform with local codes or, in absence of local codes, the National Gas and Propane Installation Code CSA B149.1 in Canada, or the National Fuel Gas Code, ANSI Z223.1 / NFPA 54 in the United States. Suitable for mobile home installation if installed in accordance with the current standard CAN/CSA Z240MH Series, for gas equipped mobile homes, in Canada or ANSI Z223.1 and NFPA 54 in the United States.

NATIONAL FIREPLACE INSTITUTE NFI CERTIFIED www.nficertified.org

We suggest that our gas hearth products be installed and serviced by professionals who are certified in the U.S. by the National Fireplace Institute® (NFI) as NFI Gas Specialists

As long as the required clearance to combustibles is maintained, the most desirable and beneficial location for an appliance is in the center of a building, thereby allowing the most efficient use of the heat created. The location of windows, doors and the traffic flow in the room where the appliance is to be located should be considered. If possible, you should choose a location where the vent will pass through the house without cutting a floor or roof joist.

If the appliance is installed directly on carpeting, vinyl tile or other combustible material other than wood flooring, the appliance shall be installed on a metal or wood panel extending the full width and depth.

If the optional fan or blower is installed, the junction box must be electrically connected and grounded in accordance with local codes, use the current CSA C22.1 Canadian Electrical Code in Canada or the ANSI/ NFPA 70 National Electrical code in the United States.

4.1

This appliance is equipped with a power back up control system. Two 1.5 volt “D” batteries (not supplied) are required for the battery pack included in the system. Use Alkaline batteries only.

2.3 GENERAL INFORMATION

FOR YOUR SATISFACTION, THIS APPLIANCE HAS BEEN TEST-FIRED TO ASSURE ITS OPERATION AND QUALITY!

This appliance is approved for bathroom, bedroom and bed-sitting room installations and is suitable for mobile home installations.

This appliance is equipped with ceramic glass. Replacement glass must be obtained from your authorized dealer / distributor and is identified in the replacement parts list. Do not substitute materials.

This appliance is not convertible for use with other gases, unless a certified kit is used.

Expansion / contraction noises during heating up and cooling down cycles are normal and are to be expected.
Changes in flame appearance from “HI” to “LO” is more evident in natural gas than in propane.
Use only accessories designed for and listed with your specific appliance.

High Elevations

Input ratings are shown in Btu per hour and are certified without de-rating up to 4,500 feet above sea level. For Installations at the elevations above 4,500 feet and in the absence of specific recommendations from the local authority having jurisdiction, the high altitude input rating shall be reduced at the rate of 4% for each additional 1,000 feet.

GAS SPECIFICATIONS				
Model	**Fuel**	**Gas Control**	**Max. Input BTU/h**	**Min. Input BTU/h**
HDX40NT	Nat	IPI Hi/Lo	40,000	26,000
HDX40PT	Prop*	IPI Hi/Lo	36,000	26,000

IPI - Intermittent Pilot Ignition System
* Using conversion kit
** Maximum Values
Conversions must be made by a qualified service technician using Wolf Steel specified and approved parts.

GAS INLET AND MANIFOLD PRESSURES		
	Natural	**Propane**
Minimum Inlet	4.5” w.c.	11.0” w.c.
Maximum Inlet	7.0” w.c.	13.0” w.c.
Manifold Pressure	3.5” w.c.	10.0” w.c.

EFFICIENCY RATINGS		
Model	**Steady State(%)**	**AFUE%****
HDX40NT	61.5%	59.5%
HDX40PT	61.5%	59.5%

2.4 RATING PLATE INFORMATION

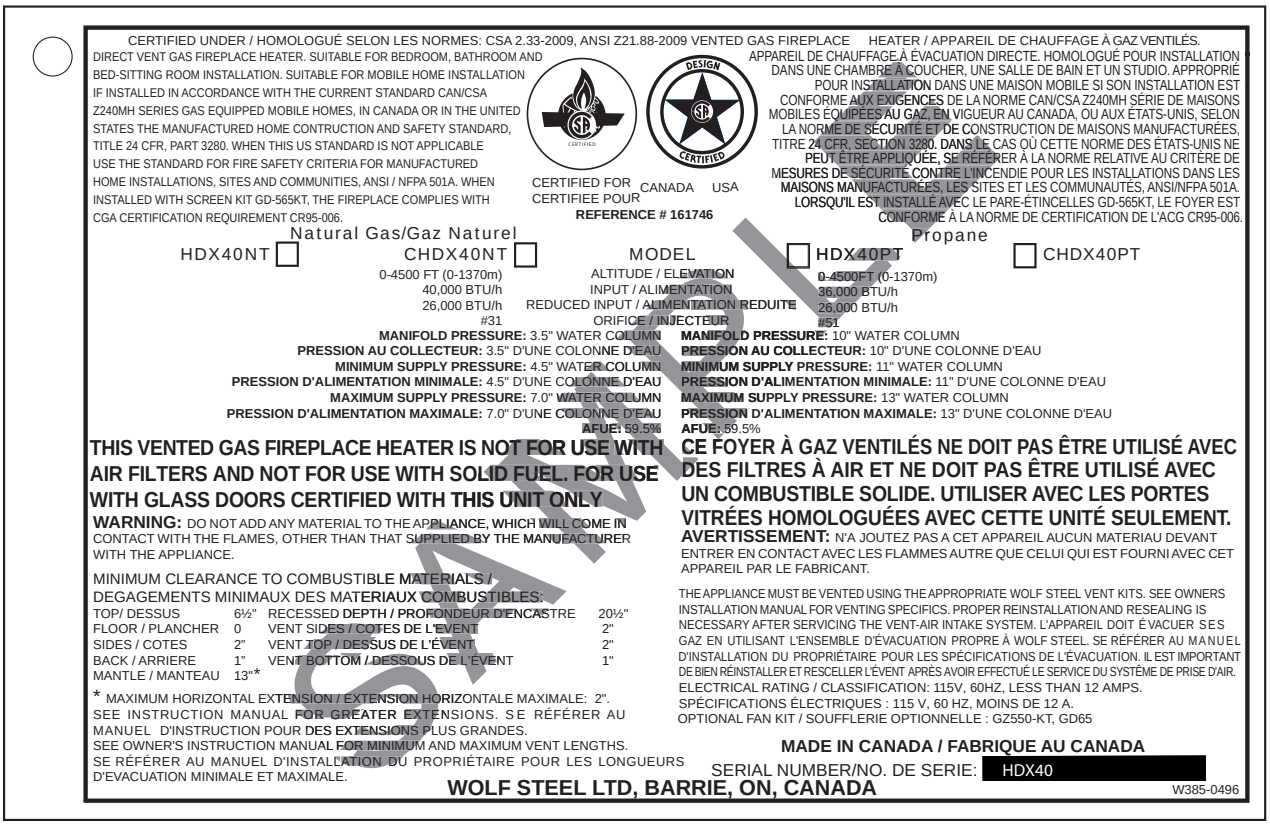

CERTIFIED UNDER / HOMOLOGUÉ SELON LES NORMES: CSA 2.33-2009, ANSI Z21.88-2009 VENTED GAS FIREPLACE HEATER / APPAREIL DE CHAUFFAGE À GAZ VENTILÉS.

DIRECT VENT GAS FIREPLACE HEATER. SUITABLE FOR BEDROOM, BATHROOM AND BED-SITTING ROOM INSTALLATION. SUITABLE FOR MOBILE HOME INSTALLATION IF INSTALLED IN ACCORDANCE WITH THE CURRENT STANDARD CAN/CSA Z240MH SERIES GAS EQUIPPED MOBILE HOMES, IN CANADA OR IN THE UNITED STATES THE MANUFACTURED HOME CONTRUCTION AND SAFETY STANDARD, TITLE 24 CFR, PART 3280. WHEN THIS US STANDARD IS NOT APPLICABLE USE THE STANDARD FOR FIRE SAFETY CRITERIA FOR MANUFACTURED HOME INSTALLATIONS, SITES AND COMMUNITIES, ANSI / NFPA 501A. WHEN INSTALLED WITH SCREEN KIT GD-565KT, THE FIREPLACE COMPLIES WITH CGA CERTIFICATION REQUIREMENT CR95-006.

APPAREIL DE CHAUFFAGE À ÉVACUATION DIRECTE. HOMOLOGUÉ POUR INSTALLATION DANS UNE CHAMBRE À COUCHER, UNE SALLE DE BAIN ET UN STUDIO. APPROPRIÉ POUR INSTALLATION DANS UNE MAISON MOBILE SI SON INSTALLATION EST CONFORME AUX EXIGENCES DE LA NORME CAN/CSA Z240MH SÉRIE DE MAISONS MOBILES ÉQUIPÉES AU GAZ, EN VIGUEUR AU CANADA, OU AUX ÉTATS-UNIS, SELON LA NORME DE SÉCURITÉ ET DE CONSTRUCTION DE MAISONS MANUFACTURÉES, TITRE 24 CFR, SECTION 3280. DANS LE CAS OÙ CETTE NORME DES ÉTATS-UNIS NE PEUT ÊTRE APPLIQUÉE, SE RÉFÉRER À LA NORME RELATIVE AU CRITÈRE DE MESURES DE SÉCURITÉ CONTRE L'INCENDIE POUR LES INSTALLATIONS DANS LES MAISONS MANUFACTURÉES, LES SITES ET LES COMMUNAUTÉS, ANSI/NFPA 501A. LORSQU'IL EST INSTALLÉ AVEC LE PARE-ÉTINCELLES GD-565KT, LE FOYER EST CONFORME À LA NORME DE CERTIFICATION DE L'ACG CR95-006.

CERTIFIED FOR CANADA USA
CERTIFIEE POUR
REFERENCE # 161746

Natural Gas/Gaz Naturel — Propane

MODEL

HDX40NT ☐		☐ HDX40PT
CHDX40NT ☐		☐ CHDX40PT
0-4500 FT (0-1370m)	ALTITUDE / ELEVATION	0-4500FT (0-1370m)
40,000 BTU/h	INPUT / ALIMENTATION	36,000 BTU/h
26,000 BTU/h	REDUCED INPUT / ALIMENTATION REDUITE	26,000 BTU/h
#31	ORIFICE / INJECTEUR	#51
MANIFOLD PRESSURE: 3.5" WATER COLUMN		**MANIFOLD PRESSURE:** 10" WATER COLUMN
PRESSION AU COLLECTEUR: 3.5" D'UNE COLONNE D'EAU		**PRESSION AU COLLECTEUR:** 10" D'UNE COLONNE D'EAU
MINIMUM SUPPLY PRESSURE: 4.5" WATER COLUMN		**MINIMUM SUPPLY PRESSURE:** 11" WATER COLUMN
PRESSION D'ALIMENTATION MINIMALE: 4.5" D'UNE COLONNE D'EAU		**PRESSION D'ALIMENTATION MINIMALE:** 11" D'UNE COLONNE D'EAU
MAXIMUM SUPPLY PRESSURE: 7.0" WATER COLUMN		**MAXIMUM SUPPLY PRESSURE:** 13" WATER COLUMN
PRESSION D'ALIMENTATION MAXIMALE: 7.0" D'UNE COLONNE D'EAU		**PRESSION D'ALIMENTATION MAXIMALE:** 13" D'UNE COLONNE D'EAU
AFUE: 59.5%		**AFUE:** 59.5%

THIS VENTED GAS FIREPLACE HEATER IS NOT FOR USE WITH AIR FILTERS AND NOT FOR USE WITH SOLID FUEL. FOR USE WITH GLASS DOORS CERTIFIED WITH THIS UNIT ONLY

WARNING: DO NOT ADD ANY MATERIAL TO THE APPLIANCE, WHICH WILL COME IN CONTACT WITH THE FLAMES, OTHER THAN THAT SUPPLIED BY THE MANUFACTURER WITH THE APPLIANCE.

CE FOYER À GAZ VENTILÉS NE DOIT PAS ÊTRE UTILISÉ AVEC DES FILTRES À AIR ET NE DOIT PAS ÊTRE UTILISÉ AVEC UN COMBUSTIBLE SOLIDE. UTILISER AVEC LES PORTES VITRÉES HOMOLOGUÉES AVEC CETTE UNITÉ SEULEMENT.

AVERTISSEMENT: N'A JOUTEZ PAS A CET APPAREIL AUCUN MATERIAU DEVANT ENTRER EN CONTACT AVEC LES FLAMMES AUTRE QUE CELUI QUI EST FOURNI AVEC CET APPAREIL PAR LE FABRICANT.

MINIMUM CLEARANCE TO COMBUSTIBLE MATERIALS / DEGAGEMENTS MINIMAUX DES MATERIAUX COMBUSTIBLES:

TOP/ DESSUS	6½"	RECESSED DEPTH / PROFONDEUR D'ENCASTRE	20½"
FLOOR / PLANCHER	0	VENT SIDES / COTES DE L'EVENT	2"
SIDES / COTES	2"	VENT TOP / DESSUS DE L'ÉVENT	2"
BACK / ARRIERE	1"	VENT BOTTOM / DESSOUS DE L'ÉVENT	1"
MANTLE / MANTEAU	13"*		

* MAXIMUM HORIZONTAL EXTENSION / EXTENSION HORIZONTALE MAXIMALE: 2". SEE INSTRUCTION MANUAL FOR GREATER EXTENSIONS. SE RÉFÉRER AU MANUEL D'INSTRUCTION POUR DES EXTENSIONS PLUS GRANDES.
SEE OWNER'S INSTRUCTION MANUAL FOR MINIMUM AND MAXIMUM VENT LENGTHS. SE RÉFÉRER AU MANUEL D'INSTALLATION DU PROPRIÉTAIRE POUR LES LONGUEURS D'EVACUATION MINIMALE ET MAXIMALE.

THE APPLIANCE MUST BE VENTED USING THE APPROPRIATE WOLF STEEL VENT KITS. SEE OWNERS INSTALLATION MANUAL FOR VENTING SPECIFICS. PROPER REINSTALLATION AND RESEALING IS NECESSARY AFTER SERVICING THE VENT-AIR INTAKE SYSTEM. L'APPAREIL DOIT ÉVACUER SES GAZ EN UTILISANT L'ENSEMBLE D'ÉVACUATION PROPRE À WOLF STEEL. SE RÉFÉRER AU MANUEL D'INSTALLATION DU PROPRIÉTAIRE POUR LES SPÉCIFICATIONS DE L'ÉVACUATION. IL EST IMPORTANT DE BIEN RÉINSTALLER ET RESCELLER L'ÉVENT APRÈS AVOIR EFFECTUÉ LE SERVICE DU SYSTÈME DE PRISE D'AIR.

ELECTRICAL RATING / CLASSIFICATION: 115V, 60HZ, LESS THAN 12 AMPS.
SPÉCIFICATIONS ÉLECTRIQUES : 115 V, 60 HZ, MOINS DE 12 A.
OPTIONAL FAN KIT / SOUFFLERIE OPTIONNELLE : GZ550-KT, GD65

MADE IN CANADA / FABRIQUE AU CANADA

SERIAL NUMBER/NO. DE SERIE: HDX40

WOLF STEEL LTD, BARRIE, ON, CANADA

W385-0496

SAMPLE

<u>INSTALLER:</u> It is your responsibility to check off the appropriate box on the rating plate according to the model, venting and gas type of the appliance.

For rating plate location, see “INSTALLATION OVERVIEW” section.

This illustration is for reference only. Refer to the rating plate on the appliance for accurate information.

3.0 VENTING

⚠ WARNING

RISK OF FIRE, MAINTAIN SPECIFIED AIR SPACE CLEARANCES TO VENT PIPE AND APPLIANCE.

IF VENTING IS INCLUDED WITH SPACERS THE VENT SYSTEM MUST BE SUPPORTED EVERY 3 FEET FOR BOTH VERTICAL AND HORIZONTAL RUNS. USE SUPPORTS OR EQUIVALENT NON-COMBUSTIBLE STRAPPING TO MAINTAIN THE REQUIRED CLEARANCE FROM COMBUSTIBLES. USE WOLF STEEL LTD. SUPPORT RING ASSEMBLY W010-0370 OR EQUIVALENT NON-COMBUSTIBLE STRAPPING TO MAINTAIN THE MINIMUM CLEARANCE TO COMBUSTIBLES FOR BOTH VERTICAL AND HORIZONTAL RUNS. SPACERS ARE ATTACHED TO THE INNER PIPE AT PREDETERMINED INTERVALS TO MAINTAIN AN EVEN AIR GAP TO THE OUTER PIPE. THIS GAP IS REQUIRED FOR SAFE OPERATION. A SPACER IS REQUIRED AT THE START, MIDDLE AND END OF EACH ELBOW TO ENSURE THIS GAP IS MAINTAINED. THESE SPACERS MUST NOT BE REMOVED.

THIS APPLIANCE USES A 5” EXHAUST / 8” AIR INTAKE VENT PIPE SYSTEM.
Refer to the section applicable to your installation.

For safe and proper operation of the appliance follow the venting instruction exactly. Deviation from the minimum vertical vent length can create difficulty in burner start-up and/or carboning. Under extreme vent configurations, allow several minutes (5-15) for the flame to stabilize after ignition. Vent lengths that pass through unheated spaces (attics, garages, crawl spaces) should be insulated with the insulation wrapped in a protective sleeve to minimize condensation. Provide a means for visually checking the vent connection to the appliance after the appliance is installed. Use a firestop, vent pipe shield or attic insulation shield when penetrating interior walls, floor or ceiling.
NOTE: If for any reason the vent air intake system is disassembled; reinstall per the instructions provided for the initial installation.

7.2

3.1 VENTING LENGTHS AND COMPONENTS

Use only Wolf Steel, Simpson Dura-Vent, Selkirk Direct Temp, American Metal Amerivent or Metal-Fab venting components. Minimum and maximum vent lengths, for both horizontal and vertical installations, and air terminal locations for either system are set out in this manual and must be adhered to. For Simpson Dura-Vent, Selkirk Direct Temp, American Metal Amerivent and Metal-Fab follow the installation procedure provided with the venting components.

A starter adaptor must be used with the following vent systems and may be purchased from the corresponding supplier:

PART	5”/8”	SUPPLIER	WEBSITE
Duravent	W175-0170	Wolf Steel	www.duravent.com
Amerivent	5DSC-N2	American Metal	www.americanmetalproducts.com
Direct Temp	5DT-AA	Selkirk	www.selkirkcorp.com
SuperSeal	5DDA	Metal-Fab	www.mtlfab.com

For Simpson Dura-Vent, Selkirk Direct Temp, American Metal Amerivent and Metal-Fab follow the installation procedure found on the website for your venting supplier.

For vent systems that provide seals on the inner exhaust flue, only the outer air intake joints must be sealed using a red high temperature silicone (RTV). This same sealant may be used on both the inner exhaust and outer intake vent pipe joints of all other approved vent systems except for the exhaust vent pipe connection to the appliance flue collar which must be sealed using the black high temperature sealant Mill Pac.

When using Wolf Steel venting components, use only approved Wolf Steel rigid / flexible components with the following termination kits: wall terminal kit **GD422-1**, **GD422R-1**, or 1/12 to 7/12 pitch roof terminal kit **GD410**, 8/12 to 12/12 roof terminal kit **GD411**, flat roof terminal kit **GD412** or periscope kit **GD401** (for wall penetration below grade). With flexible venting, in conjunction with the various terminations, use either the 5 foot vent kit **GD420** or the 10 foot vent kit **GD430**.

For optimum flame appearance and appliance performance, keep the vent length and number of elbows to a minimum.
The air terminal must remain unobstructed at all times. Examine the air terminal at least once a year to verify that it is unobstructed and undamaged.
Rigid and flexible venting systems must not be combined. Different venting manufacturer components must not be combined.

These vent kits allow for either horizontal or vertical venting of the appliance. The maximum allowable horizontal run is 20 feet. The maximum allowable vertical vent length is 40 feet. The maximum number of vent connections is two horizontally or three vertically (excluding the appliance and the air terminal connections) when using flexible venting.

Horizontal runs may have a 0” rise per foot however for optimum performance it is recommended that all horizontal runs have a minimum 1/4” rise per foot using flexible venting. For safe and proper operation of the appliance, follow the venting instructions exactly.

A terminal shall not terminate directly above a sidewalk or paved driveway which is located between two single family dwellings and serves both dwellings. Local codes or regulations may require different clearances.
Do not allow the inside liner to bunch up on horizontal or vertical runs and elbows. Keep it pulled tight. A 1¼” air gap all around between the inner liner and outer liner is required for safe operation.

8.3

3.2 TYPICAL VENT INSTALLATIONS

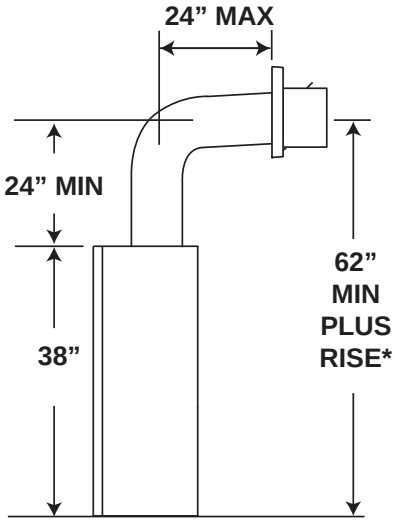

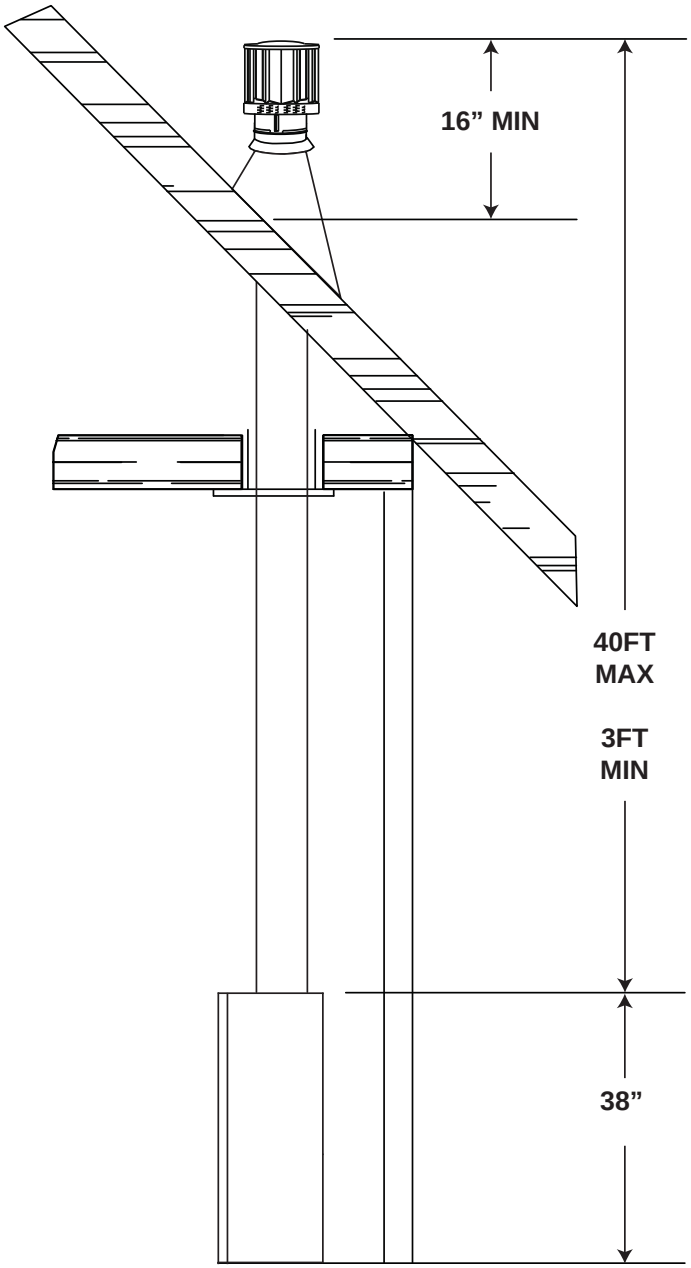

*** See “VENTING” section.**

3.3 SPECIAL VENT INSTALLATIONS

3.3.1 PERISCOPE TERMINATION

Use the periscope kit to locate the air termination above grade. The periscope must be installed so that when final grading is completed, the bottom air slot is located a minimum 12” above grade. The maximum allowable vent length is 10’.

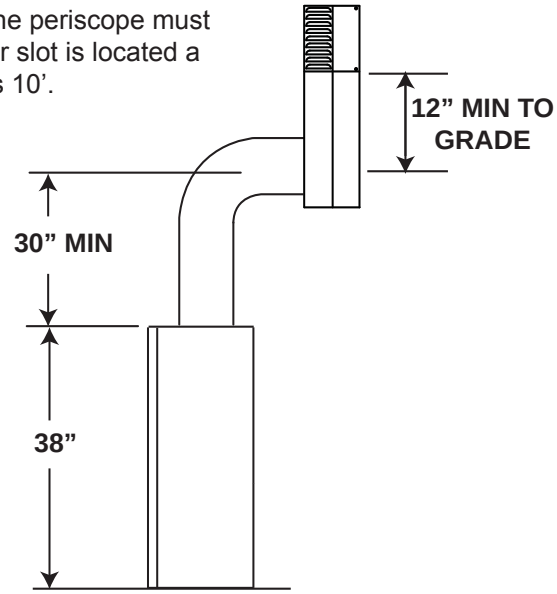

9.1

3.3.2 CORNER TERMINATION

The maximum vent length for a corner installation is 20” of horizontal run with a minimum 24” rise.

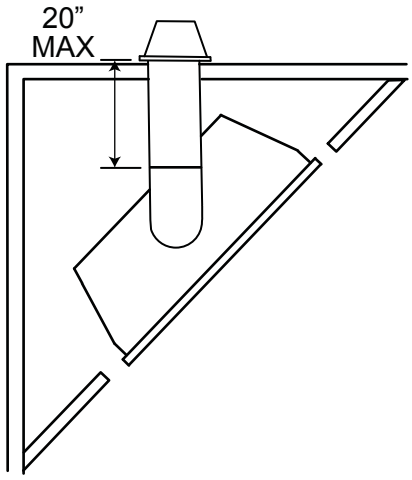

3.4 VENT TERMINAL CLEARANCES

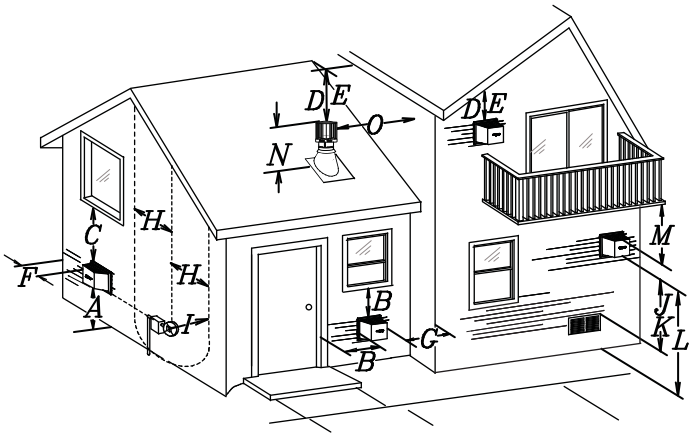

COVERED BALCONY APPLICATIONS ††*

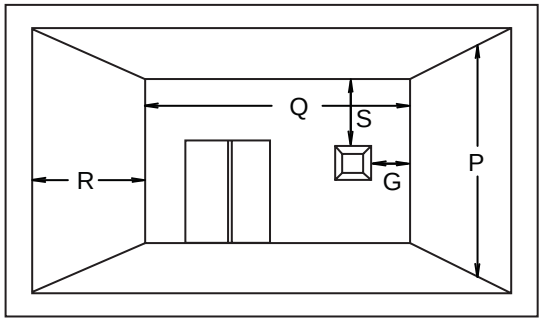

Q_{MIN}	= 3 feet
R_{MAX}	= 2 x Q_{ACTUAL}
R_{MAX}	≤ 15 feet

	INSTALLATIONS		
	CANADA	U.S.A.	
A	12”	12”	Clearance above grade, veranda porch, deck or balcony.
B	12” Δ	9” Δ	Clearance to windows or doors that open.
C	12” *	12” *	Clearance to permanently closed windows.
D	18” **	18” **	Vertical clearance to ventilated soffits located above the terminal within a horizontal distance of 2’ from the centerline of the terminal.
E	12” **	12” **	Clearance to unventilated soffit.
F	0”	0”	Clearance to an outside corner wall.
G	0” ***	0” ***	Clearance to an inside **non**-combustible corner wall or protruding **non**-combustible obstructions (chimney, etc.).
	2” ***	2” ***	Clearance to an inside combustible corner wall or protruding combustible obstructions (vent chase, etc.).
H	3’	3’ ****	Clearance to each side of the centerline extended above the meter / regulator assembly to a maximum vertical distance of 15’.
I	3’	3’ ****	Clearance to a service regulator vent outlet.
J	12”	9”	Clearance to a non-mechanical air supply inlet to the building or a combustion air inlet to any other appliance.
K	6’	3’ †	Clearance to a mechanical air supply inlet.
L	7’ ‡	7’ ****	Clearance above a paved sidewalk or paved driveway located on public property.
M	12” ††	12” ****	Clearance under a veranda, porch or deck.
N	16”	16”	Clearance above the roof.
O	2’ †*	2’ †*	Clearance from an adjacent wall including neighbouring buildings.
P	8’	8’	Roof must be **non**-combustible without openings.
Q	3’	3’	See chart for wider wall dimensions.
R	6’	6’	See chart for deeper wall dimensions. The terminal shall not be installed on any wall that has an opening between the terminal and the open side of the structure.
S	12”	12”	Clearance under a covered balcony

Δ The terminal shall not be located less than 6 feet under a window that opens on a horizontal plane in a structure with three walls and a roof.

* Recommended to prevent condensation on windows and thermal breakage

** it is recommended to use a heat shield and to maximize the distance to vinyl clad soffits.

*** The periscope requires a minimum 18 inches clearance from an inside corner.

**** This is a recommended distance. For additional requirements check local codes.

† 3 feet above if within 10 feet horizontally.

‡ A vent shall not terminate directly above a sidewalk or paved driveway that is located between two single family dwellings and serves both dwellings.

†† Permitted only if the veranda, porch, or deck is fully open on a minimum of two sides beneath the floor.

†* Recommended to prevent recirculation of exhaust products. For additional requirements check local codes.

††* Permitted only if the balcony is fully open on a minimum of one side.

NOTE: Clearances are in accordance with local installation codes and the requirements of the gas supplier.

Obadiah's · 406-300-1776

3.5 VENT APPLICATION FLOW CHART

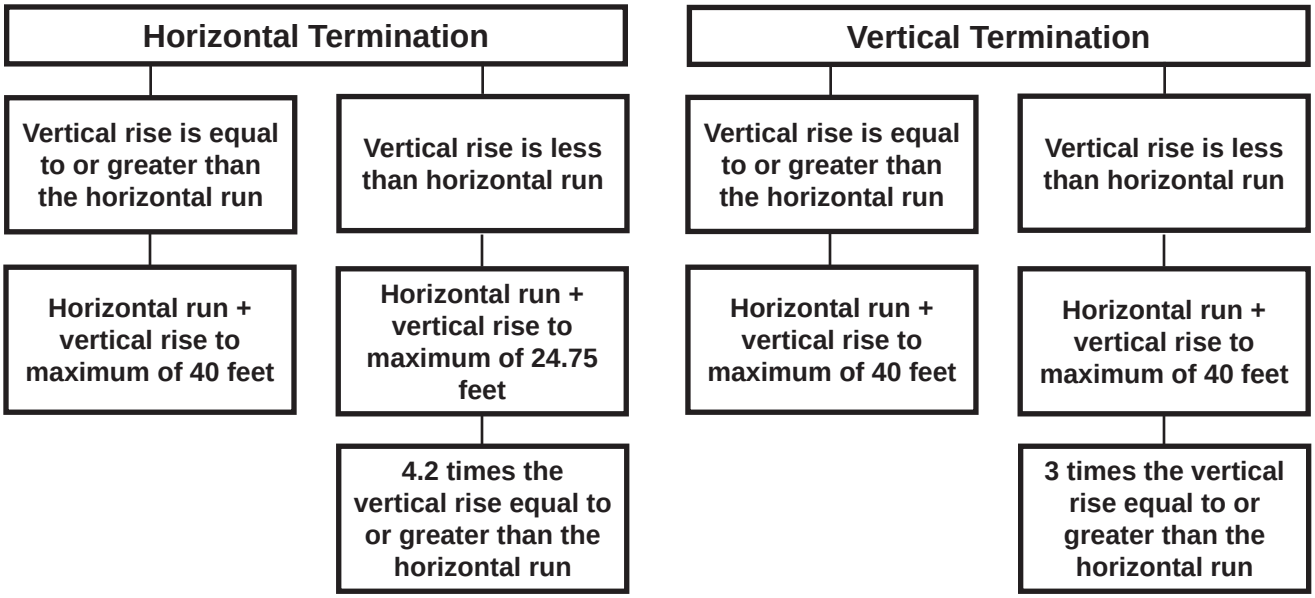

13.1

3.6 DEFINITIONS

For the following symbols used in the venting calculations and examples are:

> - greater than
≥ - equal to or greater than
< - less than
≤ - equal to or less than
H_T - total of both horizontal vent lengths (Hr) and offsets (Ho) in feet
H_R - combined horizontal vent lengths in feet
H_O - offset factor: .03 (total degrees of offset - 90°*) in feet
V_T - combined vertical vent lengths in feet

14.1

3.7 ELBOW VENT LENGTH VALUES

	FEET	INCHES
1°	0.03	0.5
15°	0.45	6.0
30°	0.9	11.0
45°	1.35	16.0
90°*	2.7	32.0

* The first 90° offset has a zero value and is shown in the formula as - 90°

15.1

3.8 HORIZONTAL TERMINATION

$(H_T) \leq (V_T)$

Simple venting configuration (only one 90° elbow)

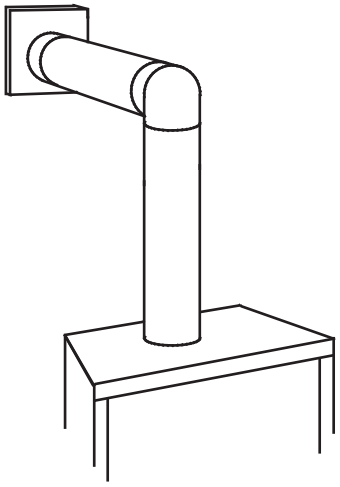

See graph to determine the required vertical rise V_T for the required horizontal run H_T.

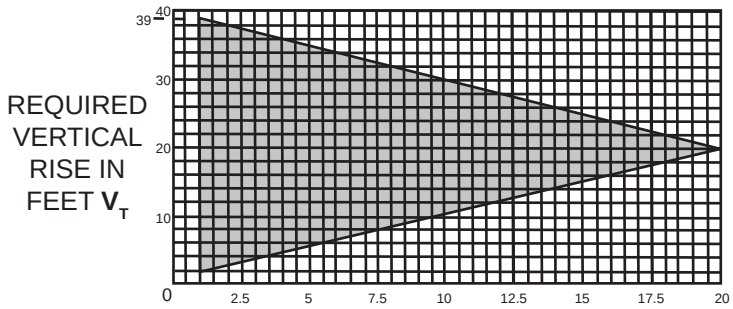

The shaded area within the lines represents acceptable values for H_T and V_T

For vent configurations requiring more than one 90° elbow, the following formulas apply:

Formula 1: $H_T \leq V_T$

Formula 2: $H_T + V_T \leq 40$ feet

Example 1:

V_1 = 3 FT

V_2 = 8 FT

$V_T = V_1 + V_2$ = 3 FT + 8 FT = 11 FT

H_1 = 2.5 FT

H_2 = 2 FT

$H_R = H_1 + H_2$ = 2.5 + 2 = 4.5 FT

H_O = .03 (three 90° elbows - 90°) = .03 (270° - 90°) = 5.4 FT

$H_T = H_R + H_O$ = 4.5 + 5.4 = 9.9 FT

$H_T + V_T$ = 9.9 + 11 = 20.9 FT

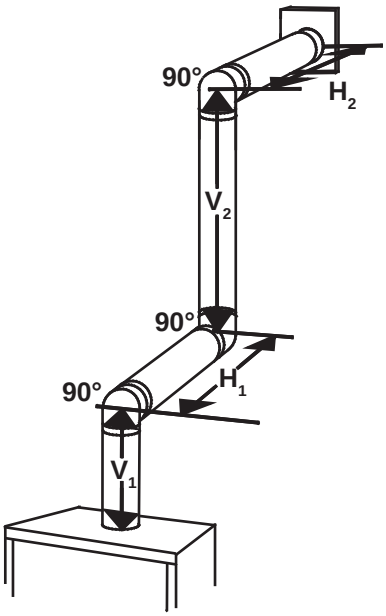

Formula 1: $H_T \leq V_T$

9.9 ≤ 11

Formula 2: $H_T + V_T \leq 40$ **FT**

20.9 ≤ 40

Since both formulas are met, this vent configuration is acceptable.

16.12

$(H_T) > (V_T)$

Simple venting configuration (only one 90° elbow)

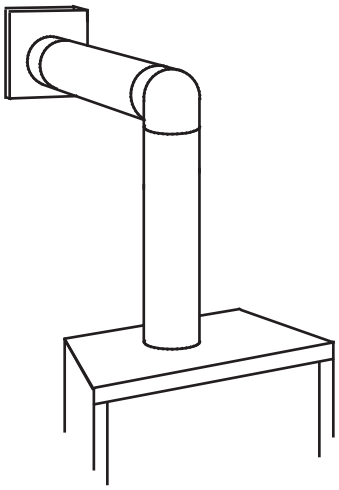

See graph to determine the required vertical rise $\mathbf{V_T}$ for the required horizontal run $\mathbf{H_T}$.

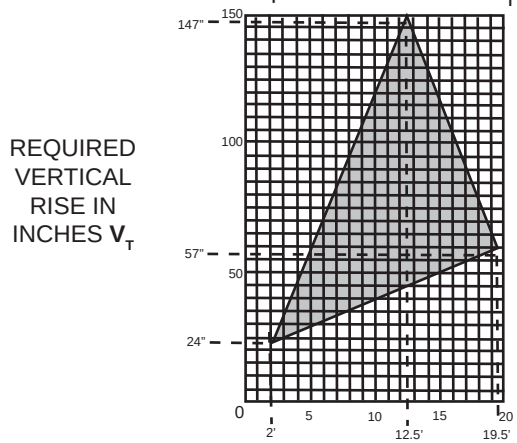

HORIZONTAL VENT RUN PLUS OFFSET IN FEET $\mathbf{H_T}$
The shaded area within the lines represents acceptable values for $\mathbf{H_T}$ and $\mathbf{V_T}$

For vent configurations requiring more than one 90° elbow, the following formulas apply:

Formula 1: $H_T \leq 4.2\ V_T$
Formula 2: $H_T + V_T \leq 24.75$ feet

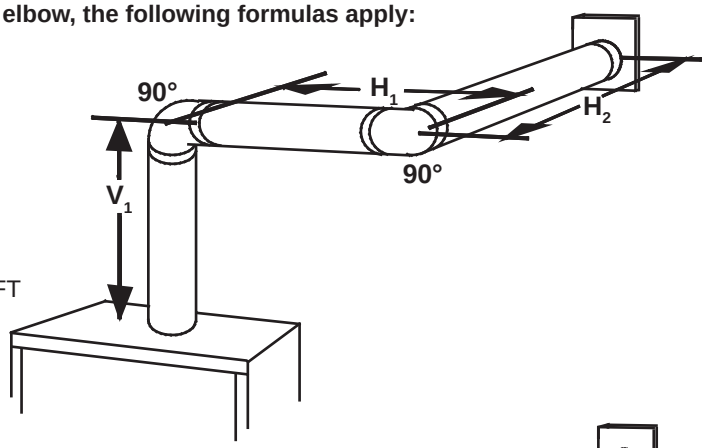

Example 2:
$V_1 = V_T = 6$ FT
$H_1 = 3$ FT
$H_2 = 5$ FT
$H_R = H_1 + H_2 = 3 + 5 = 8$ FT
$H_O = .03$ (two 90° elbows - 90°) = .03 (180° - 90°) = 2.7 FT
$H_T = H_R + H_O = 8 + 2.7 = 10.7$ FT
$H_T + V_T = 10.7 + 6 = 16.7$ FT

Formula 1: $H_T \leq 4.2\ V_T$
$4.2\ V_T = 4.2 \times 6 = 25.2$ FT
$10.7 \leq 25.2$
Formula 2: $H_T + V_T \leq 24.75$ FT
$16.7 \leq 24.75$
Since both formulas are met, this vent configuration is acceptable.

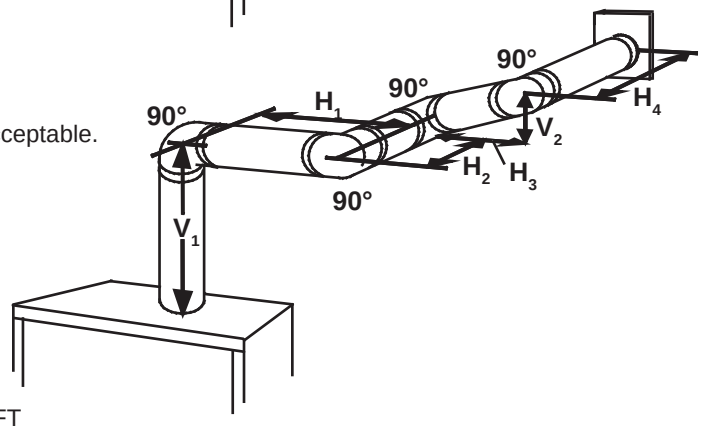

Example 3:
$V_1 = 4$ FT
$V_2 = 1.5$ FT
$V_T = V_1 + V_2 = 4 + 1.5 = 5.5$ FT
$H_1 = 2$ FT
$H_2 = 1$ FT
$H_3 = 1$ FT
$H_4 = 1.5$ FT
$H_R = H_1 + H_2 + H_3 + H_4 = 2 + 1 + 1 + 1.5 = 5.5$ FT
$H_O = .03$ (four 90° elbows - 90°) = .03 (360° - 90°) = 8.1 FT
$H_T = H_R + H_O = 5.5 + 8.1 = 13.6$ FT
$H_T + V_T = 13.6 + 5.5 = 19.1$ FT

Formula 1: $H_T \leq 4.2\ V_T$
$4.2\ V_T = 4.2 \times 5.5 = 23.1$ FT
$13.6 \leq 23.1$
Formula 2: $H_T + V_T \leq 24.75$ FT
$19.1 \leq 24.75$
Since both formulas are met, this vent configuration is acceptable.

Obadiah's · 406-300-1776

3.9 VERTICAL TERMINATION

$(H_T) \leq (V_T)$

Simple venting configurations.

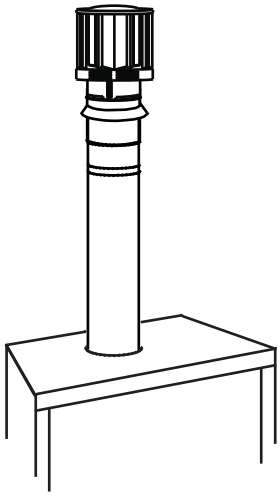

See graph to determine the required vertical rise $\mathbf{V_T}$ for the required horizontal run $\mathbf{H_T}$.

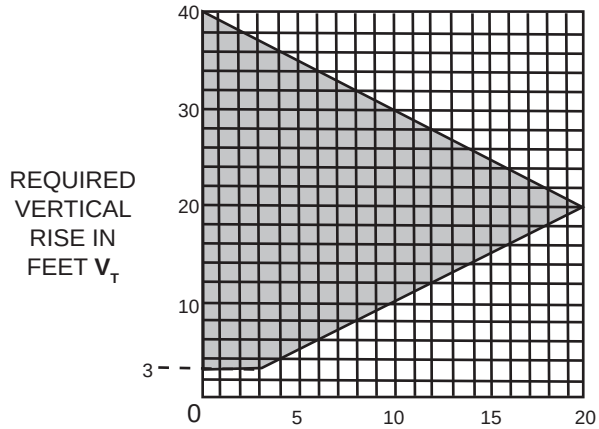

HORIZONTAL VENT RUN PLUS OFFSET IN FEET $\mathbf{H_T}$

The shaded area within the lines represents acceptable values for $\mathbf{H_T}$ and $\mathbf{V_T}$

For vent configurations requiring one or more 90° elbows the following formulas apply:

Formula 1: $\mathbf{H_T \leq V_T}$
Formula 2: $\mathbf{H_T + V_T \leq 40}$ **feet**

Example 6:
$\mathbf{V_1}$ = 5 FT
$\mathbf{V_2}$ = 6 FT
$\mathbf{V_3}$ = 10 FT
$\mathbf{V_T} = \mathbf{V_1 + V_2 + V_3} = 5 + 6 + 10 = 21$ FT
$\mathbf{H_1}$ = 8 FT
$\mathbf{H_2}$ = 2.5 FT
$\mathbf{H_R} = \mathbf{H_1 + H_2} = 8 + 2.5 = 10.5$ FT
$\mathbf{H_O}$ = .03 (four 90° elbows - 90°)
= .03 (360° - 90°) = 8.1 FT
$\mathbf{H_T} = \mathbf{H_R + H_O} = 10.5 + 8.1 = 18.6$ FT
$\mathbf{H_T + V_T} = 18.6 + 21 = 39.6$ FT

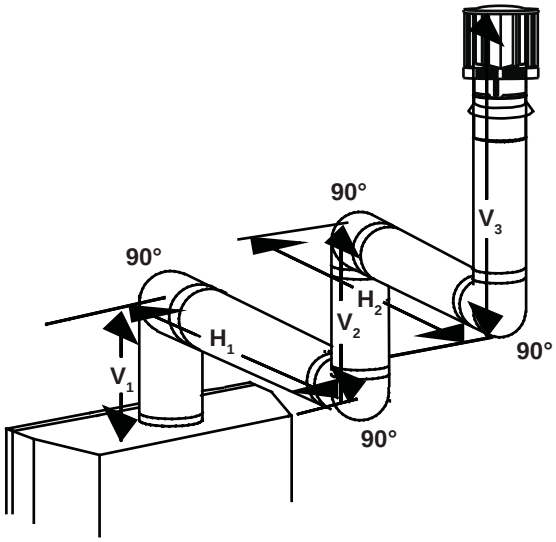

Formula 1: $\mathbf{H_T \leq V_T}$
$18.6 \leq 21$
Formula 2: $\mathbf{H_T + V_T \leq 40}$ **FT**
$39.6 \leq 40$

Since both formulas are met, this vent configuration is acceptable.

18.1

$(H_T) > (V_T)$

Simple venting configurations.

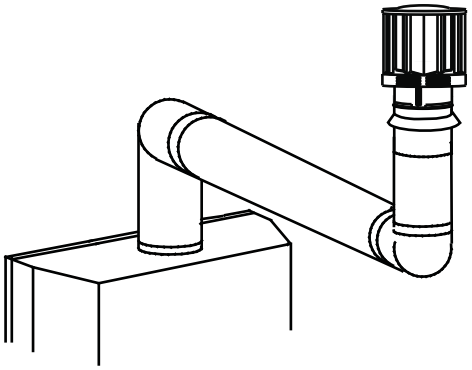

See graph to determine the required vertical rise $\mathbf{V_T}$ for the required horizontal run $\mathbf{H_T}$.

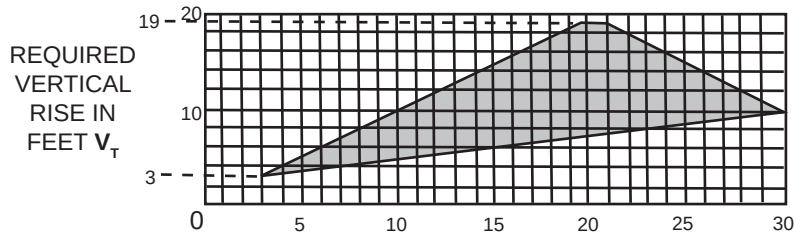

The shaded area within the lines represents acceptable values for $\mathbf{H_T}$ and $\mathbf{V_T}$

For vent configurations requiring more than two 90° elbows the following formulas apply:

Formula 1: $H_T \leq 3V_T$
Formula 2: $H_T + V_T \leq 40$ feet

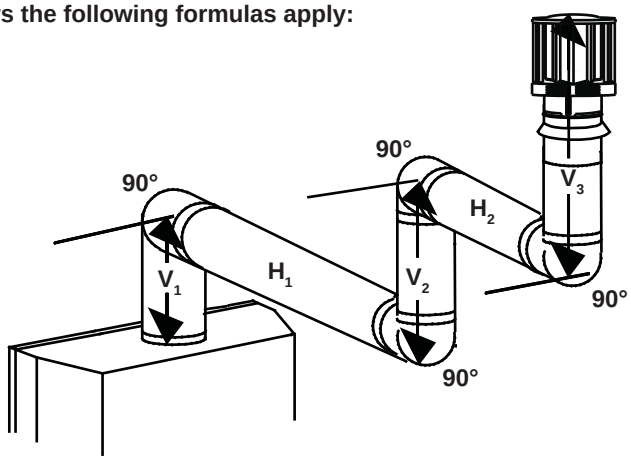

Example 2:
$\mathbf{V_1}$ = 2 FT
$\mathbf{V_2}$ = 1 FT
$\mathbf{V_3}$ = 1.5 FT
$\mathbf{V_T} = \mathbf{V_1} + \mathbf{V_2} + \mathbf{V_3}$ = 2 + 1 + 1.5 = 4.5 FT
$\mathbf{H_1}$ = 6 FT
$\mathbf{H_2}$ = 2 FT
$\mathbf{H_R} = \mathbf{H_1} + \mathbf{H_2}$ = 6 + 2 = 8 FT
$\mathbf{H_O}$ = .03 (four 90° elbows - 90°)
= .03 (360° - 90°) = 8.1 FT
$\mathbf{H_T} = \mathbf{H_R} + \mathbf{H_O}$ = 8 + 8.1 = 16.1 FT
$\mathbf{H_T} + \mathbf{V_T}$ = 16.1 + 4.5 = 20.6 FT

Formula 1: $\mathbf{H_T \leq 3V_T}$
$\mathbf{3V_T}$ = 3 x 4.5 = 13.5 FT
16.1 > 13.5

Since this formula is not met, this vent configuration is **<u>un</u>acceptable.**

Formula 2: $\mathbf{H_T + V_T \leq 40}$ **feet**
20.6 ≤ 40

Since only formula 2 is met, this vent configuration is unacceptable and a new fireplace location or vent configuration will need to be established to satisfy both formulas.

18.1_2A

4.0 INSTALLATION

⚠ WARNING

FOR SAFE AND PROPER OPERATION OF THE APPLIANCE, FOLLOW THE VENTING INSTRUCTIONS EXACTLY.

ALL INNER EXHAUST AND OUTER INTAKE VENT PIPE JOINTS MAY BE SEALED USING EITHER RED RTV HIGH TEMP SILICONE SEALANT W573-0002 (NOT SUPPLIED) OR BLACK HIGH TEMP MILL PAC W573-0007 (NOT SUPPLIED) WITH THE EXCEPTION OF THE APPLIANCE EXHAUST FLUE COLLAR WHICH MUST BE SEALED USING MILL PAC.

IF USING PIPE CLAMPS TO CONNECT VENT COMPONENTS, 3 SCREWS MUST ALSO BE USED TO ENSURE THE CONNECTION CANNOT SLIP OFF.

DO NOT CLAMP THE FLEXIBLE VENT PIPE.

RISK OF FIRE, EXPLOSION OR ASPHYXIATION. IMPROPER SUPPORT OF THE ENTIRE VENTING SYSTEM MAY ALLOW VENT TO SAG AND SEPARATE. USE VENT RUN SUPPORTS AND CONNECT VENT SECTIONS PER INSTALLATION INSTRUCTIONS.

RISK OF FIRE, DO NOT ALLOW LOOSE MATERIALS OR INSULATION TO TOUCH THE VENT PIPE. REMOVE INSULATION TO ALLOW FOR THE INSTALLATION OF THE ATTIC SHIELD AND TO MAINTAIN CLEARANCES TO COMBUSTIBLES.

68.2A

4.1 WALL AND CEILING PROTECTION

⚠ WARNING

DO NOT FILL THE SPACE BETWEEN THE VENT PIPE AND ENCLOSURE WITH ANY TYPE OF MATERIAL. DO NOT PACK INSULATION OR COMBUSTIBLES BETWEEN CEILING FIRESTOPS. ALWAYS MAINTAIN SPECIFIED CLEARANCES AROUND VENTING AND FIRESTOP SYSTEMS. INSTALL WALL SHIELDS AND FIRESTOPS AS SPECIFIED. FAILURE TO KEEP INSULATION OR OTHER MATERIALS AWAY FROM VENT PIPE MAY CAUSE FIRE.

70.1

For optimum performance it is recommended that all horizontal runs have a minimum of 1/4” rise per foot using flexible venting. For safe and proper operation of the appliance, follow the venting instructions exactly.

4.1.1 HORIZONTAL INSTALLATION

⚠ WARNING

THE FIRESTOP ASSEMBLY MUST BE INSTALLED WITH THE VENT SHIELD TO THE TOP.

TERMINALS MUST NOT BE RECESSED INTO A WALL OR SIDING MORE THAN THE DEPTH OF THE RETURN FLANGE OF THE MOUNTING PLATE.

This application occurs when venting through an exterior wall. Having determined the correct height for the air terminal location, cut and frame a hole in the exterior wall as illustrated to accommodate the firestop assembly. Dry fit the firestop assembly before proceeding to ensure the brackets on the rear surface fit to the inside surface of the horizontal framing.

The length of the vent shield may be cut shorter for combustible walls that are less than 8 1/2” thick but the vent shield must extend the full depth of the combustible wall.

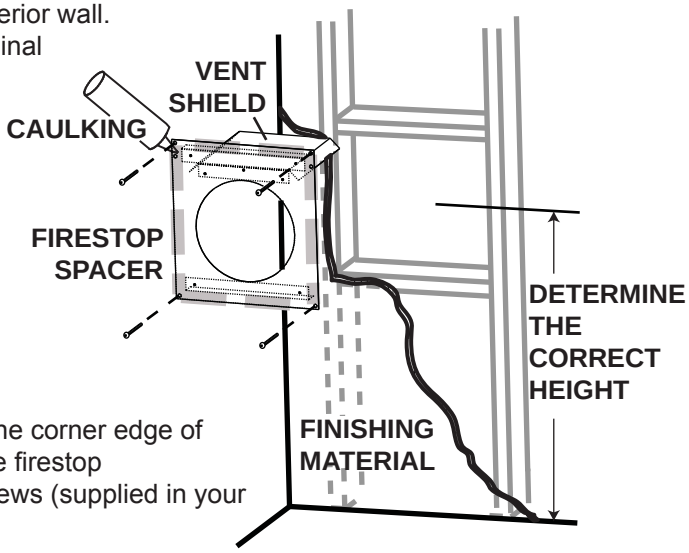

A. Apply a bead of caulking (not supplied) around the corner edge of the inside surface of the firestop assembly, fit the firestop assembly to the hole and secure using the 4 screws (supplied in your manual baggie).

B. Once the vent pipe is installed in its final position, apply high temperature sealant W573-0007 (not supplied) between the pipe and the firestop.

20.2

4.1.2 VERTICAL INSTALLATION

This application occurs when venting through a roof. Installation kits for various roof pitches are available from your authorized dealer / distributor. See accessories to order specific kits required.

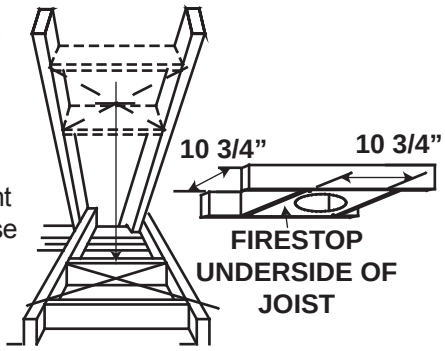

A. Determine the air terminal location, cut and frame a square opening as illustrated in the ceiling and the roof to provide the minimum 1“ clearance between the vent pipe and any combustible material. Try to center the vent pipe location midway between two joists to prevent having to cut them. Use a plumb bob to line up the center of the openings. A vent pipe shield will prevent any materials such as insulation, from filling up the 1” air space around the pipe. Nail headers between the joist for extra support.

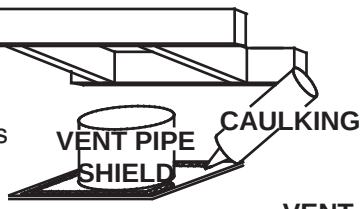

B. Apply a bead of caulking (not supplied) to the framework or to the Wolf Steel vent pipe shield plate or equivalent (in the case of a finished ceiling), and secure over the opening in the ceiling. A firestop must be placed on the bottom of each framed opening in a roof or ceiling that the venting system passes through. Apply a bead of caulking all around and place a firestop spacer over the vent shield to restrict cold air from being drawn into the room or around the fireplace. Ensure that both spacer and shield maintain the required clearance to combustibles. Once the vent pipe is installed in its final position, apply sealant between the pipe and the firestop assembly.

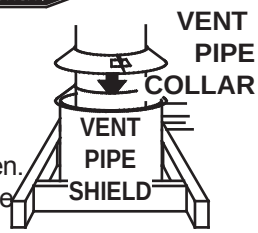

C. In the attic, slide the vent pipe collar down to cover up the open end of the shield and tighten. This will prevent any materials, such as insulation, from filling up the 1” air space around the pipe.

21.1

4.2 USING FLEXIBLE VENT COMPONENTS

⚠ WARNING

DO NOT ALLOW THE INNER FLEX PIPE TO BUNCH UP ON HORIZONTAL OR VERTICAL RUNS AND ELBOWS. KEEP IT PULLED TIGHT.

SPACERS ARE ATTACHED TO THE INNER FLEX PIPE AT PREDETERMINED INTERVALS TO MAINTAIN AN EVEN AIR GAP TO THE OUTER FLEX PIPE. THIS GAP IS REQUIRED FOR SAFE OPERATION. A SPACER IS REQUIRED AT THE START, MIDDLE AND END OF EACH ELBOW TO ENSURE THIS GAP IS MAINTAINED. THESE SPACERS MUST NOT BE REMOVED.

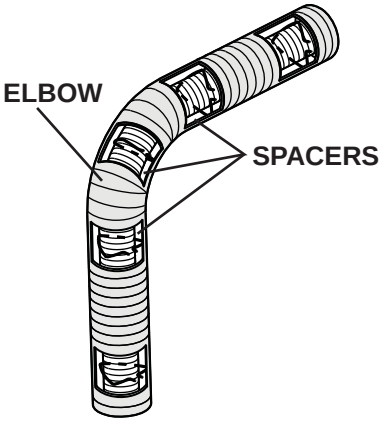

For safe and proper operation of the appliance, follow the venting instructions exactly.
All inner flex pipe and outer flex pipe joints may be sealed using high temperature sealant W573-0002 (not supplied) or the high temperature sealant W573-0007 Mill Pac (not supplied). However, the high temperature sealant W573-0007 Mill Pac (not supplied) must be used on the joint connecting the inner flex pipe and the exhaust flue collar.
Use only approved flexible vent pipe kits marked:

"Wolf Steel Approved Venting" as identified by the stamp only on the outer flex pipe.

22.1

4.2.1 HORIZONTAL AIR TERMINAL INSTALLATION

A. Stretch the inner flex pipe to the required length taking into account the additional length needed for the finished wall surface. Slip the vent pipe a minimum of 2" over the inner sleeve of the air terminal and secure with 3 #8 screws. Apply a heavy bead of the high temperature sealant W573-0007 Mill Pac (not supplied).

B. Using the outer flex pipe, slide over the outer combustion air sleeve of the air terminal and secure with 3 #8 screws. Seal using high temperature sealant W573-0002 (not supplied).

C. Insert the vent pipes through the firestop maintaining the required clearance to combustibles. Holding the air terminal (lettering in an upright, readable position), secure to the exterior wall and make weather tight by sealing with caulking (not supplied).

D. If more vent pipe needs to be used to reach the fireplace, couple them together as illustrated. The vent system must be supported approximately every 3 feet for both vertical and horizontal runs. Use noncombustible strapping to maintain the minimum clearance to combustibles.

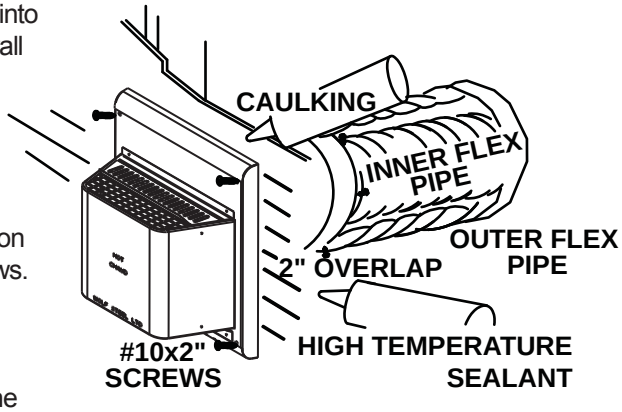

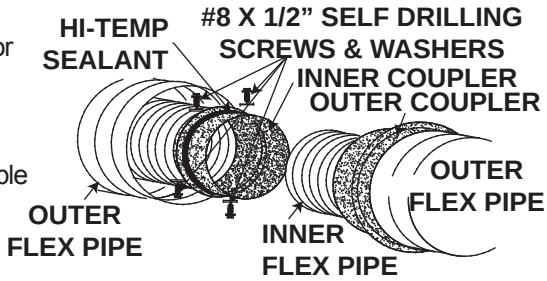

The air terminal mounting plate may be recessed into the exterior wall or siding no greater than the depth of its return flange.

23.1

4.2.2 VERTICAL AIR TERMINAL INSTALLATION

⚠ WARNING

MAINTAIN A MINIMUM 2” SPACE BETWEEN THE AIR INLET BASE AND THE STORM COLLAR.

A. Fasten the roof support to the roof using the screws provided. The roof support is optional. In this case the venting is to be adequately supported using either an alternate method suitable to the authority having jurisdiction or the optional roof support.

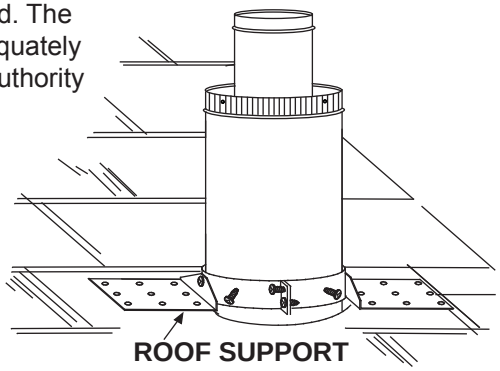

B. Stretch the inner flex pipe to the required length. Slip the inner flex pipe a minimum of 2” over the inner pipe of the air terminal connector and secure with 3 #8 screws. Seal using a heavy bead of high temperature sealant W573-0007 (not supplied).

C. Repeat using the outer flex pipe, using a heavy bead of high temperature sealant W573-0002 (not supplied).

D. Thread the air terminal connector / vent pipe assembly down through the roof. The air terminal must be positioned vertically and plumb. Attach the air terminal connector to the roof support, ensuring that the top of the air terminal is 16” above the highest point that it penetrates the roof.

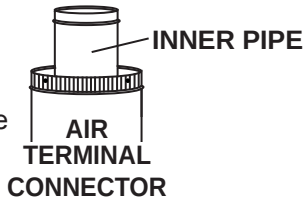

E. Remove nails from the shingles, above and to the sides of the air terminal connector. Place the flashing over the air terminal connector leaving a min. 3/4” of the air terminal connector showing above the top of the flashing. Slide the flashing underneath the sides and upper edge of the shingles. Ensure that the air terminal connector is properly centred within the flashing, giving a 3/4” margin all around. Fasten to the roof. Do not nail through the lower portion of the flashing. Make weather-tight by sealing with caulking. Where possible, cover the sides and top edges of the flashing with roofing material.

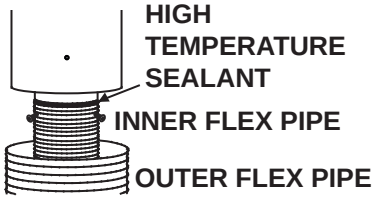

F. Aligning the seams of the terminal and air terminal connector, place the terminal over the air terminal connector making sure the vent pipe goes into the hole in the terminal. Secure with the three screws provided.

G. Apply a heavy bead of weatherproof caulking 2” above the flashing. Install the storm collar around the air terminal and slide down to the caulking. Tighten to ensure that a weather-tight seal between the air terminal and the collar is achieved.

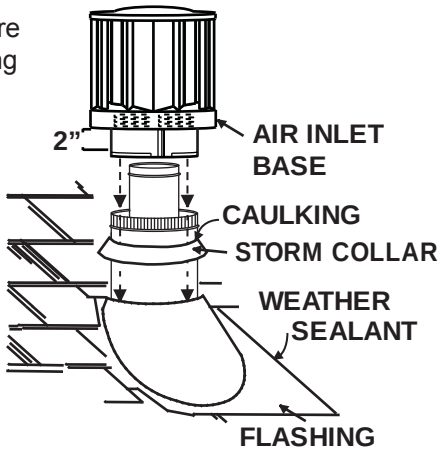

H. If more vent pipe needs to be used to reach the appliance see “HORIZONTAL AIR TERMINAL INSTALLATION” section.

24.1

4.3 MOBILE HOME

This appliance is certified to be installed as an OEM (Original Equipment Manufacturer) installation in a manufactured home or mobile home and must be installed in accordance with the manufacturer's instructions and the Manufactured Home Construction and Safety Standard, Title 24 CFR, Part 3280, in the United States or the Mobile Home Standard, CAN/CSA Z240 MH Series, in Canada. This appliance is only for use with the type(s) of gas indicated on the rating plate. A conversion kit is supplied with the mobile home appliance.

This Mobile/Manufactured Home Listed appliance comes factory equipped with a means to secure the unit. Built in appliances are equipped with 1/4" diameter holes located in the front left and right corners of the base. Use #10 hex head screws, inserted through the holes in the base to secure. For free standing products contact your local authorized dealer / distributor for the appropriate securing kit. For mobile home installations, the appliance must be fastened in place. It is recommended that the appliance be secured in all installations. Always turn off the pilot and the fuel supply at the source, prior to moving the mobile home. After moving the mobile home and prior to lighting the appliance, ensure that the logs are positioned correctly.

This appliance is certified to be installed in an aftermarket permanently located, manufactured (mobile) home, where not prohibited by local codes.
This appliance is only for use with the type of gas indicated on the rating plate. This appliance is not convertible for use with other gases, unless a certified kit is used.

Conversion Kits
This appliance is field convertible between Natural Gas (NG) and Propane (LP).
To convert from one gas to another consult your Authorized dealer/distributor.

29.1

4.4 ACCESS PANEL FOR GAS LINE CONNECTION

4.4.1 Unscrew the 4 screws that hold the Access Panel to the firebox.
4.4.2 Remove the Gasket (careful not to tear).

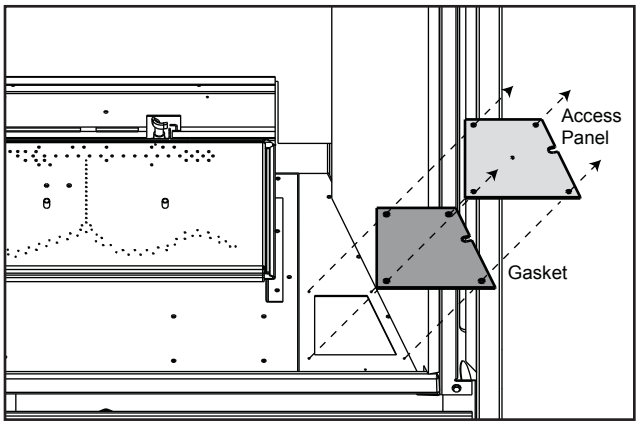

4.5 GAS INSTALLATION

⚠ WARNING
RISK OF FIRE, EXPLOSION OR ASPHYXIATION. ENSURE THERE ARE NO IGNITION SOURCES SUCH AS SPARKS OR OPEN FLAMES.
SUPPORT GAS CONTROL WHEN ATTACHING GAS SUPPLY PIPE TO PREVENT DAMAGING GAS LINE.
ALWAYS LIGHT THE PILOT WHETHER FOR THE FIRST TIME OR IF THE GAS SUPPLY HAS RUN OUT WITH THE GLASS DOOR OPENED OR REMOVED. PURGING OF THE GAS SUPPLY LINE SHOULD BE PERFORMED BY A QUALIFIED SERVICE TECHNICIAN. ASSURE THAT A CONTINUOUS GAS FLOW IS AT THE BURNER BEFORE CLOSING THE DOOR. ENSURE ADEQUATE VENTILATION. FOR GAS AND ELECTRICAL LOCATIONS, SEE "DIMENSION" SECTION.
ALL GAS CONNECTIONS MUST BE CONTAINED WITHIN THE APPLIANCE WHEN COMPLETE.
HIGH PRESSURE WILL DAMAGE VALVE. DISCONNECT GAS SUPPLY PIPING BEFORE TESTING GAS LINE AT TEST PRESSURES ABOVE 1/2 PSIG.
VALVE SETTINGS HAVE BEEN FACTORY SET, DO NOT CHANGE.

Installation and servicing to be done by a qualified installer. **Do not use open flame.**

4.5.1. Move the appliance into position and secure.

4.5.2. If equipped with a flex connector the appliance is designed to accept a 1/2" gas supply. Without the connector it is designed to accept a 3/8" gas supply. The appliance is equipped with a manual shut off valve to turn off the gas supply to the appliance.

4.5.3. Connect the gas supply in accordance to local codes. In the absence of local codes, install to the current CAN/CSA-B149.1 Installation Code in Canada or to the current National Fuel Gas Code, ANSI Z223.1 / NFPA 54 in the United States.

4.5.4 When flexing any gas line, support the gas valve so that the lines are not bent or kinked.

4.5.5 The gas line flex-connector should be installed to provide sufficient movement for shifting the burner assembly on it's side to aid with servicing components.

4.5.6 Check for gas leaks by brushing on a soap and water solution.

30.1A

5.0 FRAMING

⚠ WARNING

RISK OF FIRE!

IN ORDER TO AVOID THE POSSIBILITY OF EXPOSED INSULATION OR VAPOUR BARRIER COMING IN CONTACT WITH THE APPLIANCE BODY, IT IS RECOMMENDED THAT THE WALLS OF THE APPLIANCE ENCLOSURE BE "FINISHED" (IE: DRYWALL / SHEETROCK), AS YOU WOULD FINISH ANY OTHER OUTSIDE WALL OF A HOME. THIS WILL ENSURE THAT CLEARANCE TO COMBUSTIBLES IS MAINTAINED WITHIN THE CAVITY.

DO NOT NOTCH THE FRAMING AROUND THE APPLIANCE STAND-OFFS. FAILURE TO MAINTAIN AIR SPACE CLEARANCE MAY CAUSE OVER HEATING AND FIRE. PREVENT CONTACT WITH SAGGING OR LOOSE INSULATION OR FRAMING AND OTHER COMBUSTIBLE MATERIALS. BLOCK OPENING INTO THE CHASE TO PREVENT ENTRY OF BLOWN-IN INSULATION. MAKE SURE INSULATION AND OTHER MATERIALS ARE SECURED.

WHEN CONSTRUCTING THE ENCLOSURE ALLOW FOR FINISHING MATERIAL THICKNESS TO MAINTAIN CLEARANCES. FRAMING OR FINISHING MATERIAL CLOSER THAN THE MINIMUMS LISTED MUST BE CONSTRUCTED ENTIRELY OF NON-COMBUSTIBLE MATERIALS. MATERIALS CONSISTING ENTIRELY OF STEEL, IRON, BRICK, TILE, CONCRETE, SLATE, GLASS OR PLASTERS, OR ANY COMBINATION THEREOF ARE SUITABLE. MATERIALS THAT ARE REPORTED AS PASSING ASTM E 136, STANDARD TEST METHOD FOR BEHAVIOUR OF MATERIALS IN A VERTICAL TUBE FURNACE AT 750°C AND UL763 SHALL BE CONSIDERED NON-COMBUSTIBLE MATERIALS.

MINIMUM CLEARANCE TO COMBUSTIBLES MUST BE MAINTAINED OR A SERIOUS FIRE HAZARD COULD RESULT.

THE APPLIANCE REQUIRES A MINIMUM ENCLOSURE HEIGHT. MEASURE FROM THE APPLIANCE BASE.

IF STEEL STUD FRAMING KITS WITH CEMENT BOARD ARE PROVIDED, THEY MUST BE INSTALLED.

71.1

It is best to frame your appliance after it is positioned and the vent system is installed. Frame to local building codes.

It is not necessary to install a hearth extension with this appliance.

When roughing in the appliance, raise the appliance to accommodate for the thickness of the finished floor materials, i.e. tile, carpeting, hard wood, which if not planned for will interfere with the opening of the lower access door and the installation of many decorative flashing accessories.

Combustible materials may be installed flush with the front of the appliance but must not cover any of the black face-areas of the appliance. Non-combustible material (brick, stone or ceramic tile) may protrude in these areas.

⚠ WARNING

DO NOT BUILD INTO THIS AREA - IT MUST BE LEFT CLEAR TO PROVIDE ADEQUATE CLEARANCE FOR THE VENT IN THIS 14” WIDE AREA CENTERED ALONG THE FRONT OF THE APPLIANCE. NO COMBUSTIBLES ARE ALLOWED.

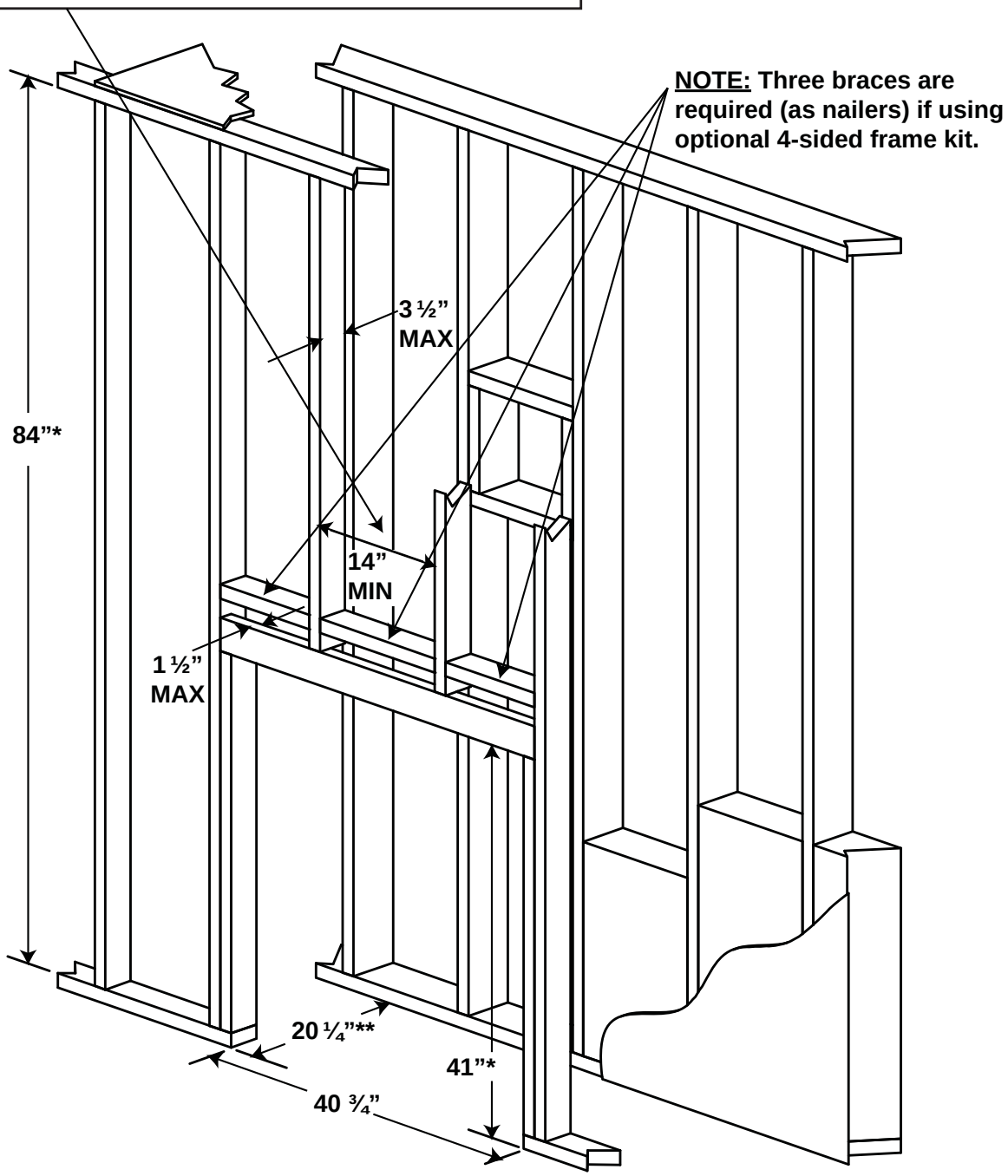

* Allow for finished floor and hearth thickness when setting these dimensions.
** When constructing the enclosure allow for finishing material thickness to maintain clearances.

5.1 MINIMUM CLEARANCE TO COMBUSTIBLES

COMBUSTIBLE FRAMING:	
Sides, back, bottom and top of the appliance	0” to stand-offs
COMBUSTIBLE FINISHING:	
Sides	2” to front edge of the appliance
Enclosure Top	84” from the bottom of the appliance
Recessed Depth	20 1/4”
Sides of the vent pipe	2”*
Bottom of the vent pipe	1”
Top of vent pipe	2”*
Ceiling	70” from the bottom of the appliance

*** HORIZONTAL VENT SECTIONS:** A minimum clearance of 1” at the bottom and sides and 2” at the top of the vent pipe in all horizontal runs to combustibles is required except for clearances in appliance enclosures. Horizontal vent sections within enclosures require a minimum clearance of 18” at the top of the vent pipe. See “MINIMUM CLEARANCE TO COMBUSTIBLE ENCLOSURES” section. Use firestop spacer W010-1800 (supplied) where vent pipe penetrates combustible walls.

*** VERTICAL VENT SECTIONS:** A minimum clearance of 1” all around the vent pipe on all vertical runs to combustibles is required except for clearances in appliance enclosures. Vertical vent sections within enclosures require a minimum clearance of 4” to the sides of the vent pipe. See “MINIMUM CLEARANCE TO COMBUSTIBLE ENCLOSURES” section. Use firestop spacer W500-0367 (not supplied) where vent pipe penetrates combustible ceilings or floors.

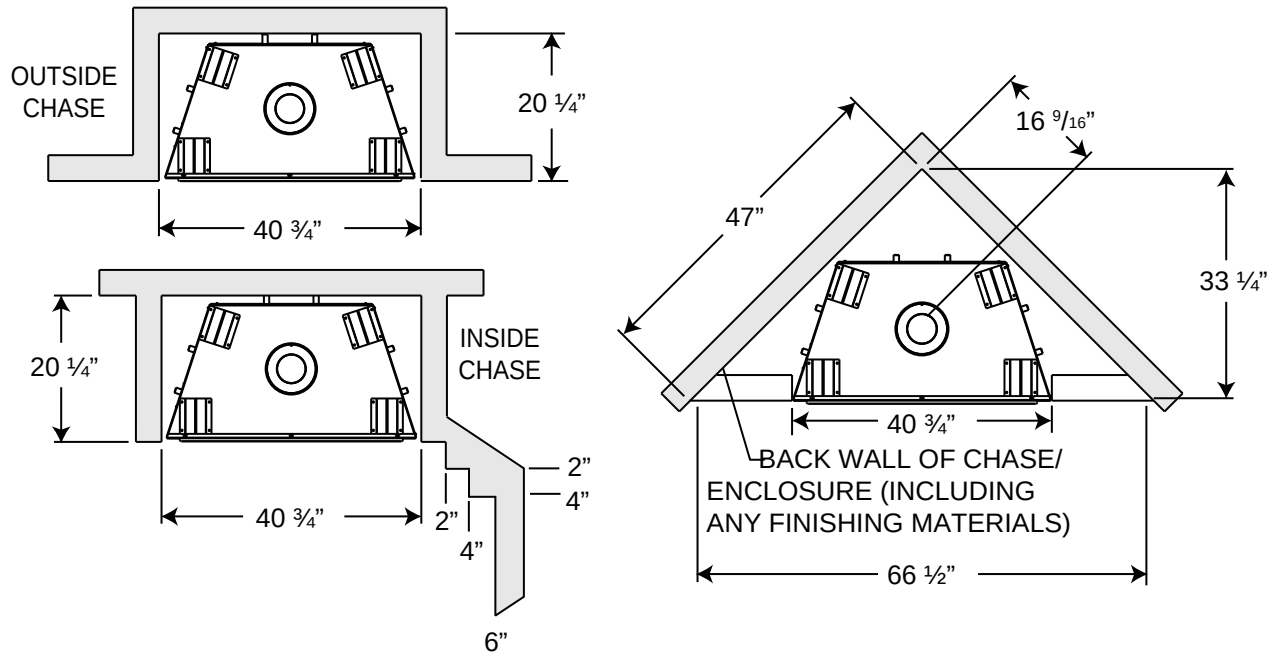

5.2 MINIMUM CLEARANCE TO COMBUSTIBLE ENCLOSURES

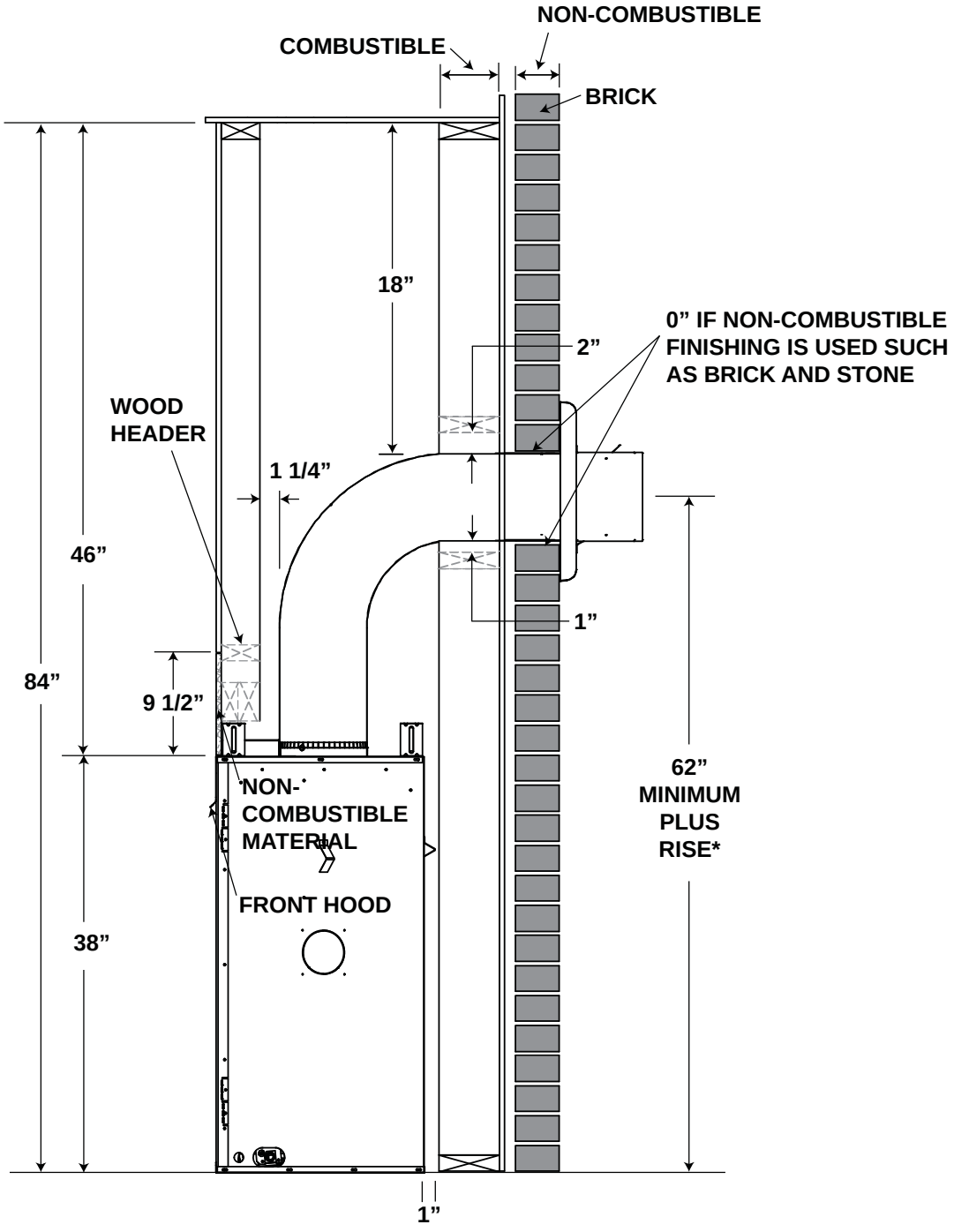

For temperature requirements, the enclosure space around and above the appliance must be left unobstructed. It is recommended that the enclosure be ventilated at the top and bottom to circulate the hot air.

* See “VENTING” section.

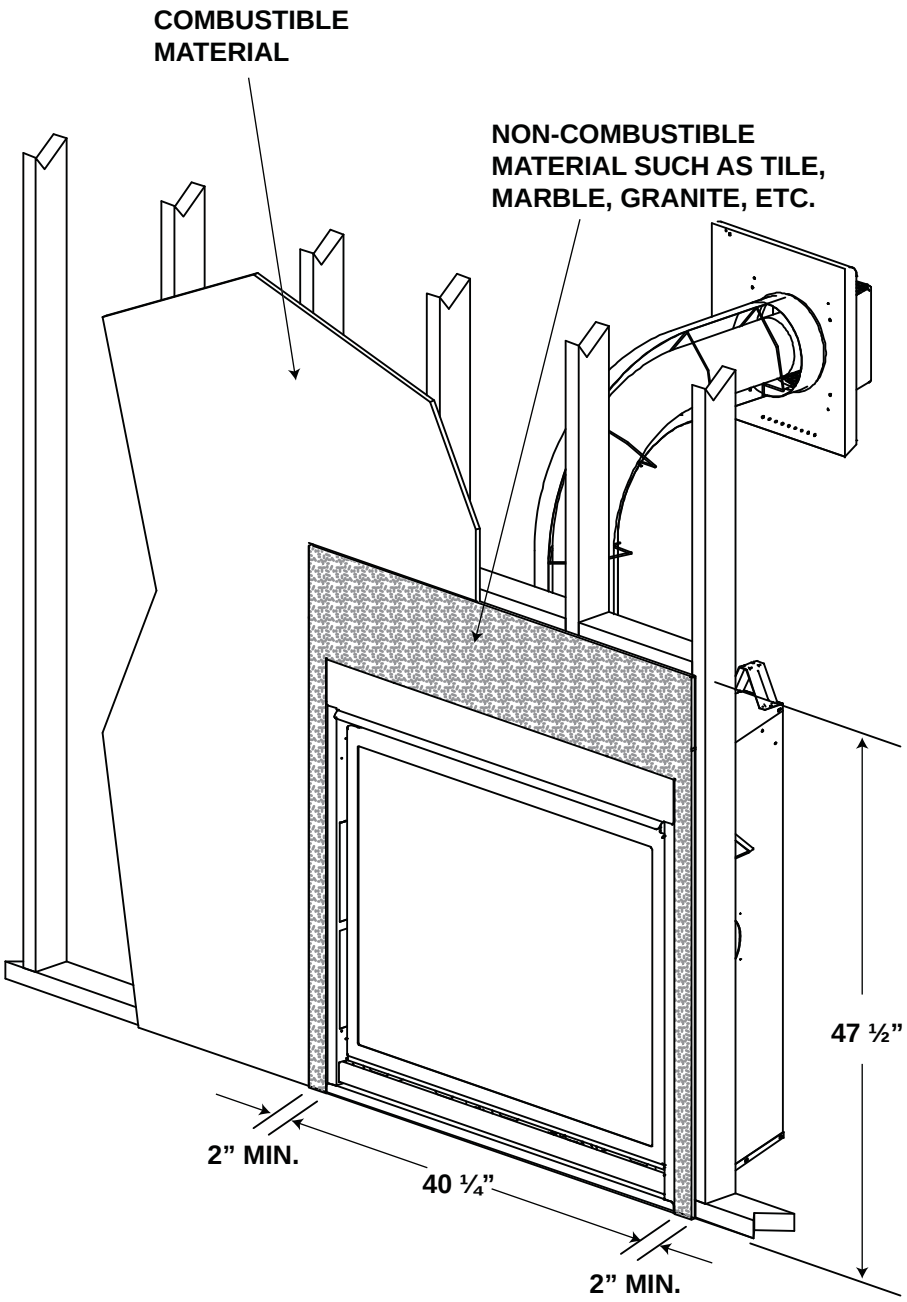

A joint compound that is resilient to heat and cracking should be used when taping and mudding seams.

Non-combustible Material Definitions

Material which will not ignite and burn. Materials consisting entirely of steel, iron, brick, tile, concrete, slate, glass or plasters, or any combination thereof are suitable.

Materials that are reported as passing ASTM E 136, Standard Test Method for Behaviour of Materials in a Vertical Tube Furnace at 750°C and UL763 shall be considered non-combustible materials.

5.3 MINIMUM MANTEL CLEARANCES

⚠ WARNING

RISK OF FIRE, MAINTAIN ALL SPECIFIED AIR SPACE CLEARANCES TO COMBUSTIBLES. FAILURE TO COMPLY WITH THESE INSTRUCTIONS MAY CAUSE A FIRE OR CAUSE THE APPLIANCE TO OVERHEAT. ENSURE ALL CLEARANCES (I.E. BACK, SIDE, TOP, VENT, MANTEL, FRONT, ETC.) ARE CLEARLY MAINTAINED.

WHEN USING PAINT OR LACQUER TO FINISH THE MANTEL, THE PAINT OR LACQUER MUST BE HEAT RESISTANT TO PREVENT DISCOLOURATION.

73.1

Combustible mantel clearance can vary according to the mantel depth. Use the graph to help evaluate the clearance needed.

MANTEL DIMENSIONS		
Ref	**Height**	**Depth**
A	38”	
B	13”	2”
C	15”	4”
D	17”	6”
E	19”	8”

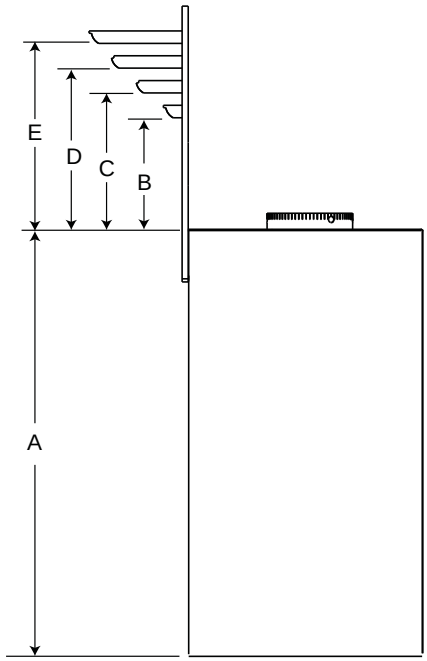

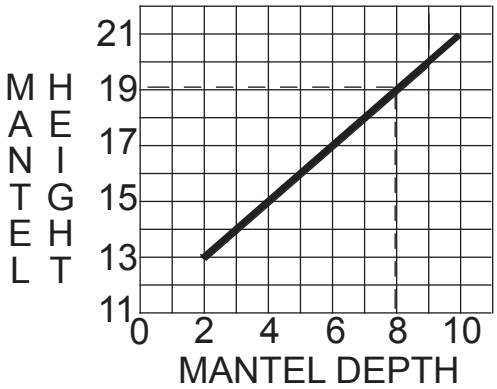

6.0 FINISHING

⚠ WARNING

RISK OF FIRE!

NEVER OBSTRUCT THE FRONT OPENING OF THE APPLIANCE.

THE FRONT OF THE APPLIANCE MUST BE FINISHED WITH ANY NON-COMBUSTIBLE MATERIALS SUCH AS BRICK, MARBLE, GRANITE, ETC., PROVIDED THAT THESE MATERIALS DO NOT GO BELOW THE SPECIFIED DIMENSION AS ILLUSTRATED.

DO NOT STRIKE, SLAM OR SCRATCH GLASS. DO NOT OPERATE APPLIANCE WITH GLASS REMOVED, CRACKED, BROKEN OR SCRATCHED.

FACING AND/OR FINISHING MATERIAL MUST NEVER OVERHANG INTO THE APPLIANCE OPENING.

THE GLASS DOOR ASSEMBLY IS DESIGNED TO PIVOT FORWARD WHEN RELIEVING EXCESS PRESSURE THAT MIGHT OCCUR. FINISHING OR OTHER MATERIALS MUST NOT BE LOCATED IN THE OPENING SURROUNDING THE DOOR AS THIS WILL INTERFERE WITH THE DOORS ABILITY TO RELIEVE THE PRESSURE.

72.6

6.1 DOOR REMOVAL / INSTALLATION

⚠ WARNING

GLASS MAY BE HOT, DO NOT TOUCH GLASS UNTIL COOLED.

THE DOOR LATCHES ARE PART OF A SAFETY SYSTEM AND MUST BE PROPERLY ENGAGED. DO NOT OPERATE THE APPLIANCE WITH LATCHES DISENGAGED.

FACING AND/OR FINISHING MATERIALS MUST NOT INTERFERE WITH AIR FLOW THROUGH AIR OPENINGS, LOUVRES OPENINGS, OPERATION OF LOUVRES OR DOORS OR ACCESS FOR SERVICE. OBSERVE ALL CLEARANCES WHEN APPLYING COMBUSTIBLE MATERIALS.

BEFORE DOOR IS REMOVED TURN THE APPLIANCE OFF AND WAIT UNTIL APPLIANCE IS COOL TO THE TOUCH. DOORS ARE HEAVY AND FRAGILE SO HANDLE WITH CARE.

75.1

Before the glass door can be removed, the optional face-plate must be removed, see optional faceplate instructions for more information.

The glass door is secured to the top front edge of the firebox with two latches. Pull the handles of the latches forward, then lift the latches out from the door frame to release the top of the door. Next, pivot the door forward until the top edge clears the front of the appliance. Carefully grip the sides of the door lifting it out from the retainer along the bottom of the door.

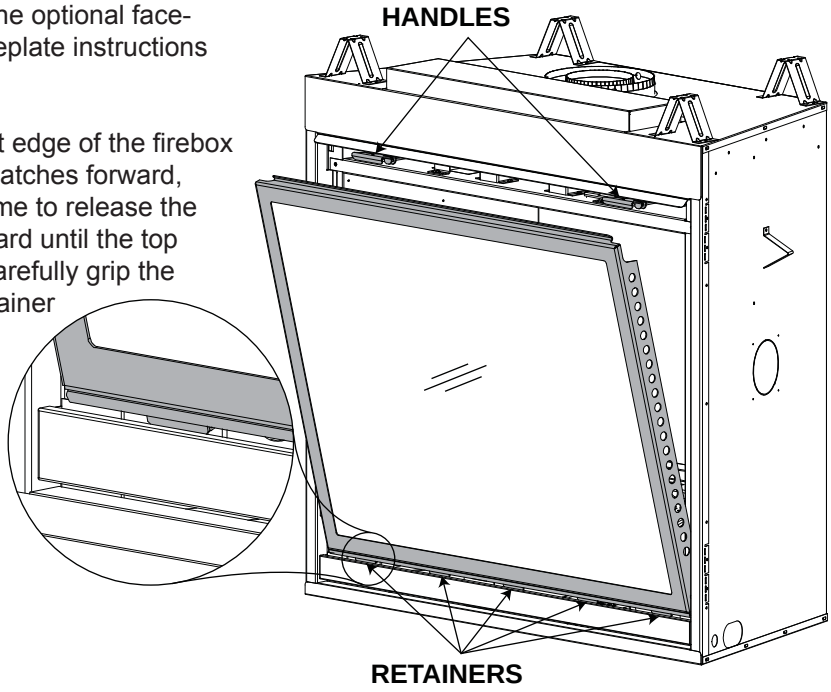

6.2 LOG PLACEMENT

⚠ WARNING

LOGS MUST BE PLACED IN THEIR EXACT LOCATION IN THE APPLIANCE. DO NOT CHANGE OR MODIFY FROM THE PROPER LOG POSITION, SINCE APPLIANCE MAY NOT FUNCTION PROPERLY AND DELAYED IGNITION MAY OCCUR.

THE LOGS ARE FRAGILE AND SHOULD BE HANDLED WITH CARE.

The individual logs can be easily identified by the numbers cast on the underside of each log. Phazer™ logs and glowing embers exclusive to Wolf Steel Ltd., provide a unique and realistic glowing effect that is different in every installation. Take the time to carefully position the glowing embers for a maximum glowing effect. During the initial use of the appliance, log colours may vary. During the initial use of the appliance the colours will become more uniform as colour pigments burn in during the heat activated curing process.

6.2.1 Place the rear log (W135-0444) on rear bracket, ensure the log is seated properly on the rear bracket and located on the center pin.

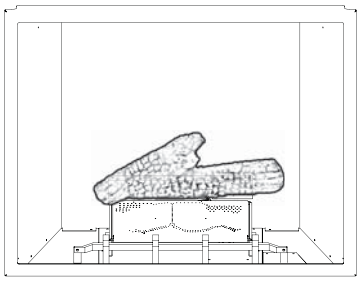

6.2.2 Place the charcoal strip log (W135-0448) on top of the grate aligning the notches in the charcoal strip with the grate.

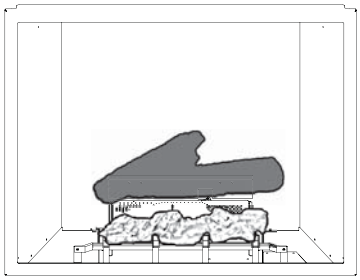

6.2.3 Align the hole in the bottom of the front left log (W135-0450) with the screw and spacer on the left side of the burner. The middle of this log rests against the charcoal strip.

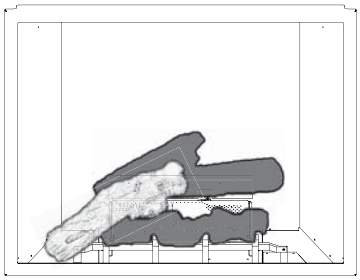

6.2.4 Align the hole in the bottom of the front right log (W135-0451) with the screw and spacer on the right side of the burner. The middle of the log rests against the charcoal strip.

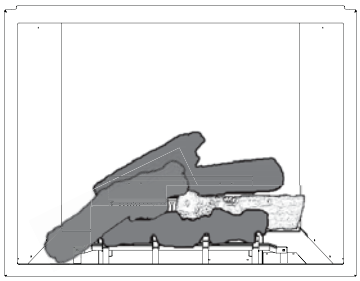

6.2.5 Align the holes in the bottom of the right log (W135-0447) with the pins in the rear and front right log.

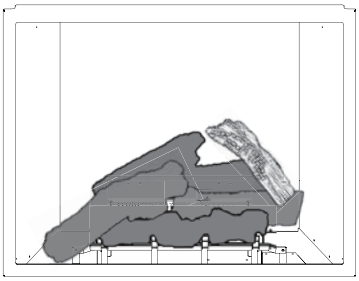

6.2.6 Align the holes in the bottom of the middle log (W135-0445) with the pins in the front left and right logs.

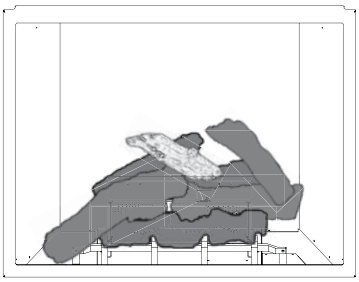

6.2.7 Align the hole in the bottom of the left log (W135-0446) with the pin in the rear log. Resting the right side of the log against the burner.

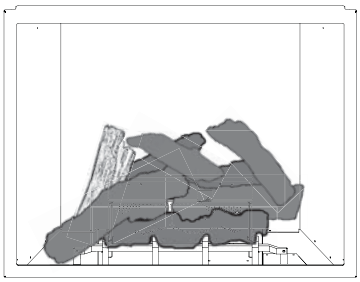

6.2.8 Align the hole in the bottom of the front log (W135-0449) with the pin in the charcoal strip. Rest the right side of the log against the far right grate post.

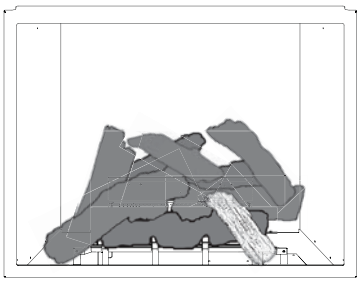

6.3 GLOWING EMBER PLACEMENT

Tear the embers into pieces and place on top of the front burner area behind the charcoal strip. Care should be taken to shred the embers into thin, small irregular pieces as only the exposed edges of the fibre hairs will glow. **The ember material will only glow when exposed to direct flame; however, care should be taken to not block the burner ports.**
Blocked burner ports can cause an incorrect flame pattern, carbon deposits and delayed ignition. ***PHAZER***™ logs glow when exposed to direct flame. Use only certified "glowing embers" and ***PHAZER***™ logs available from your Authorized dealer.

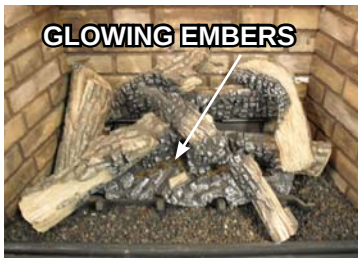

6.4 LAVA ROCK

Lava rock should be spread out evenly around the burner on the firebox base. **NOTE: Lava rock is not to be placed on the burner.**

6.5 OPTIONAL ROCK PLACEMENT

⚠ WARNING

REAL ROCKS MUST NOT BE USED IN THIS APPLIANCE. HEAT WILL CAUSE THEM TO EXPLODE.

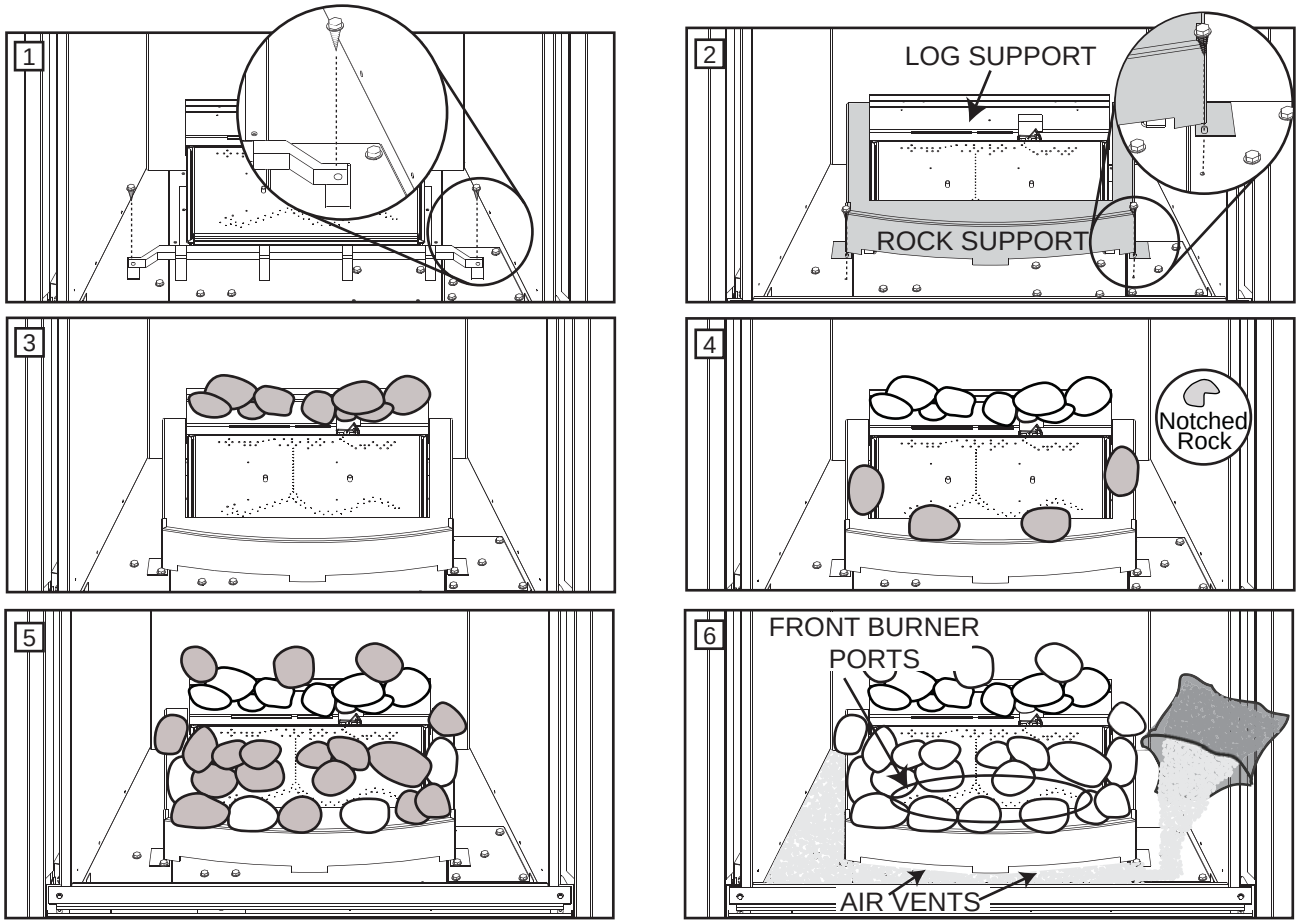

Before beginning with the installation, remove the door and all burner media from the unit. eg. logs, charcoal etc. Retain the glowing embers.

6.5.1 Remove the grate by removing the 2 screws that secure it. **NOTE: All screws must be re-installed to maintain a firebox seal.**

6.5.2 Remove the 2 screws from the firebox base (as shown). Install the rock support using the 2 screws. **NOTE: The protective plastic coating must be removed prior to operating the appliance.**

6.5.3 Sit the two rock clusters on top of the rear log support. Ensure the clusters are sitting flat.

6.5.4 Place the large notched rocks along the inside and outside edges of the rock support as desired.

6.5.5 Place the remaining refractory rocks around the burner as desired, **making sure not to cover any burner ports.** (There are no set locations)

6.5.6 Re-install the glowing embers over the front burner ports. Refer to your installation instructions if necessary. Empty enough sand onto the firebox base to cover all the screw heads. Spread the sand evenly, **making sure not to block the air vents.**

6.5.6 Re-install the door.

6.6 LOGO PLACEMENT

Remove the backing of the logo supplied and place on the glass viewing door or bottom access panel as illustrated.

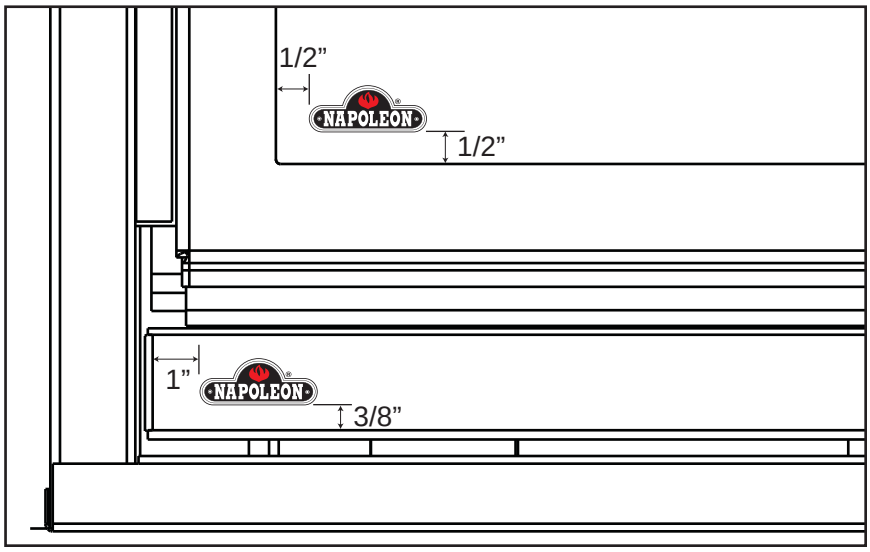

7.0 OPTIONAL BLOWER INSTALLATION

⚠ WARNING

RISK OF FIRE AND ELECTRICAL SHOCK.

TURN OFF THE GAS AND ELECTRICAL POWER BEFORE SERVICING THIS APPLIANCE.

USE ONLY WOLF STEEL APPROVED OPTIONAL ACCESSORIES AND REPLACEMENT PARTS WITH THIS APPLIANCE. USING NON-LISTED ACCESSORIES (BLOWERS, DOORS, LOUVRES, TRIMS, GAS COMPONENTS, VENTING COMPONENTS, ETC.) COULD RESULT IN A SAFETY HAZARD AND WILL VOID THE WARRANTY AND CERTIFICATION.

ENSURE THAT THE FAN'S POWER CORD IS NOT IN CONTACT WITH ANY SURFACE OF THE APPLIANCE TO PREVENT ELECTRICAL SHOCK OR FIRE DAMAGE. DO NOT RUN THE POWER CORD BENEATH THE APPLIANCE.

THE WIRE HARNESS PROVIDED IN THE BLOWER KIT IS A UNIVERSAL HARNESS. WHEN INSTALLED, ENSURE THAT ANY EXCESS WIRE IS CONTAINED, PREVENTING IT FROM MAKING CONTACT WITH MOVING OR HOT OBJECTS.

51.5

7.1 ACCESSING THE BLOWER

⚠ WARNING

BE CAREFUL NOT TO TEAR THE BURNER TRAIN GASKET. A REPLACEMENT GASKET CAN BE ORDERED FROM YOUR LOCAL AUTHORIZED DEALER / DISTRIBUTOR.

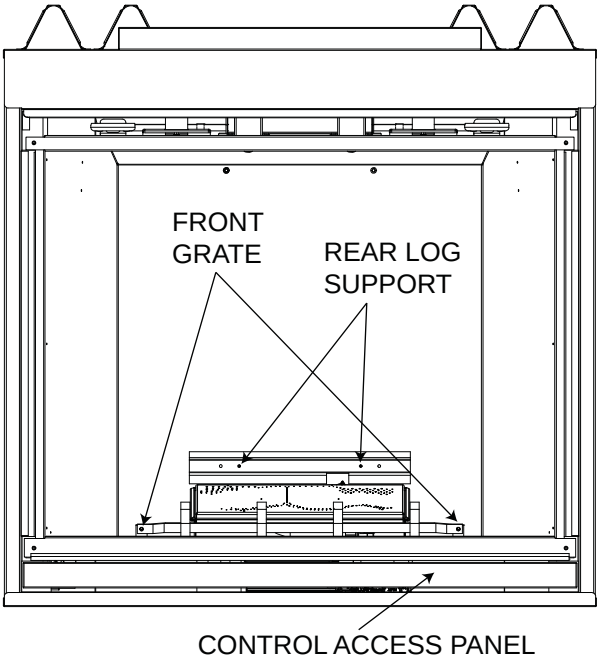

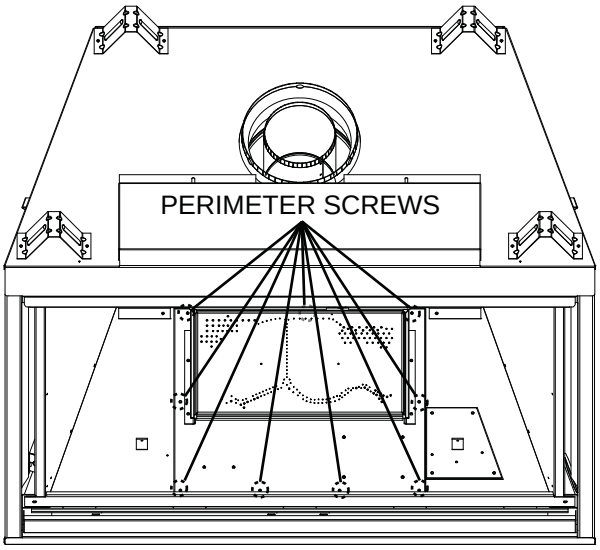

7.1.1 Remove the control access panel.
7.1.2 Remove the door, see the section "DOOR REMOVAL / INSTALLATION".
7.1.3 Carefully remove the log set and optional brick panels if installed, see section "LOG PLACEMENT".
7.1.4 Remove the 2 screws holding the front grate in place.
7.1.5 Remove the 2 screws holding the rear log support.
7.1.6 Remove the 9 perimeter screws as illustrated and lift out the burner base assembly and gasket. (The gas line flex-connector should provide sufficient movement to permit shifting the burner assembly on it's side).

7.2 INSTALLING THE BLOWER

7.2.1 Open the blower kit and remove the thermal disc from the bracket. Remove the speed control bracket from the burner base assembly, install the thermal disc and speed control switch onto the speed control bracket and reattach to the burner base.

7.2.2 Reverse procedure to re-assemble.

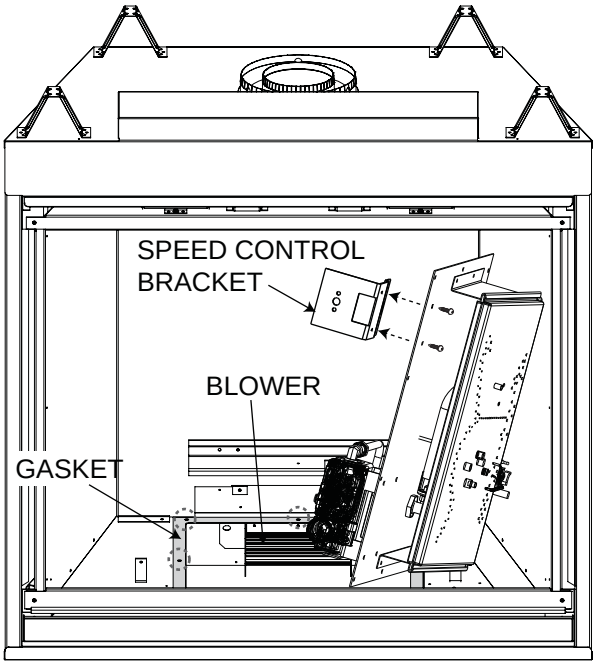

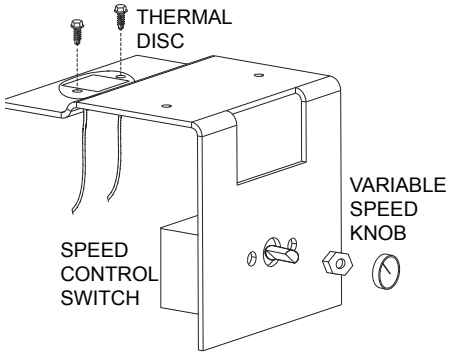

INSTALLATION TO BE DONE BY A QUALIFIED INSTALLER and must be electrically connected and grounded in accordance with local codes. In the absence of local codes, use the current CSA C22.1 Canadian electrical code in Canada or the ANSI / NFPA 70 national electrical code in the United States.

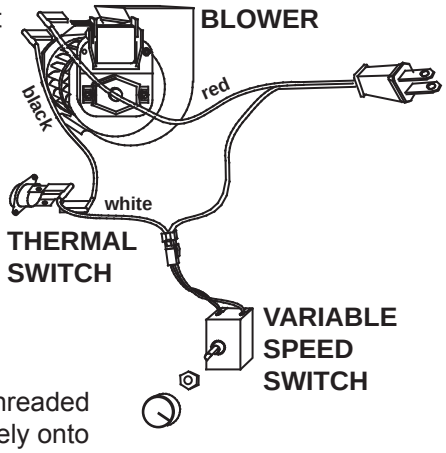

Drywall dust will penetrate into the blower bearings, causing irreparable damage. Care must be taken to prevent drywall dust from coming into contact with the blower or its compartment. Any damage resulting from this condition is not covered by the warranty policy.
To safely install the fan, turn off the electricity first.

Slide the vibration reducing pad **(A)** into the clip **(C)** and up against the threaded stud **(B)** at the other end. The blower must be able to be positioned entirely onto the pad.

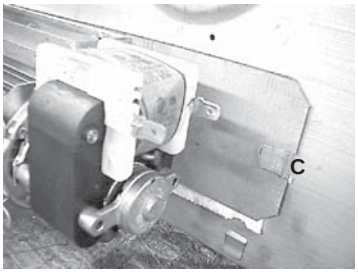

Attach the connectors from the black and white wires to the thermal disc.

Attach the connectors from the black and red wires to the blower.

Plug the harness cord into the receptacle.

Because the blower is thermally activated, when turned on, it will automatically start approximately 10 minutes after lighting the fireplace and will run for approximately 30-45 minutes after the fireplace has been turned off. Use of the fan increases the output of heat.

51.2

8.0 WIRING DIAGRAM / ELECTRICAL INFORMATION

⚠ WARNING

DO NOT USE THIS APPLIANCE IF ANY PART HAS BEEN UNDER WATER. CALL A QUALIFIED SERVICE TECHNICIAN IMMEDIATELY TO HAVE THE APPLIANCE INSPECTED FOR DAMAGE TO THE ELECTRICAL CIRCUIT.

RISK OF ELECTRICAL SHOCK OR EXPLOSION. DO NOT WIRE 110V TO THE VALVE OR TO THE APPLIANCE WALL SWITCH. INCORRECT WIRING WILL DAMAGE CONTROLS.

ALL WIRING SHOULD BE DONE BY A QUALIFIED ELECTRICIAN AND SHALL BE IN COMPLIANCE WITH LOCAL CODES. IN THE ABSENCE OF LOCAL CODES, USE THE CURRENT CSA22.1 CANADIAN ELECTRIC CODE IN CANADA OR THE CURRENT NATIONAL ELECTRIC CODE ANSI/NFPA NO. 70 IN THE UNITED STATES.

ALWAYS LIGHT THE PILOT WHETHER FOR THE FIRST TIME OR IF THE GAS SUPPLY HAS RAN OUT, WITH THE GLASS DOOR OPENED OR REMOVED.

69.2

8.1 WIRING REQUIREMENTS

8.1.1 This appliance must be electrically connected and grounded in accordance with local codes. In the absence of local codes, use the current CSA C22.1 CANADIAN ELECTRICAL CODE in Canada or the ANSI/NFPA 70-1996 NATIONAL ELECTRICAL CODE in the United States.

8.1.2 Low voltage and 110 VAC voltage cannot be shared within the same wall box.

8.1.3 Wire the appliance junction box to 110 VAC for proper operation of the appliance.

8.1.4 Refer to “WIRING DIAGRAM” section.

8.1.5 This appliance is equipped with an electronic control valve which operates on a 3 volt system.

8.1.6 Plug the 3 volt AC transformer into the appliance junction box to supply power to the appliance and install two “D” cell batteries (not included) into the battery tray before use (only required if the appliance is to operate during a power failure).

8.2 OPTIONAL ACCESSORIES REQUIREMENTS

8.2.1 This appliance may be used with a wall switch, wall mounted thermostat and/or a remote control.

8.2.2 Wiring for optional Wolf Steel approved accessories should be done now to avoid reconstruction. Follow instructions that come with those accessories.

8.2.3 The Battery Tray, IPI Control Module, and Remote Control Receiver can be accessed through the air space between the firebox front and the lower-front finishing cover panel.

8.2.4 The Battery Tray, IPI Control Module, Remote Control Receiver must be secured using Velcro to the inside of the lower cover panel.

OPTIONAL REMOTE CONTROL RECEIVER LOCATION

8.2.5 Optional remote control receiver locations as shown in illustration below.

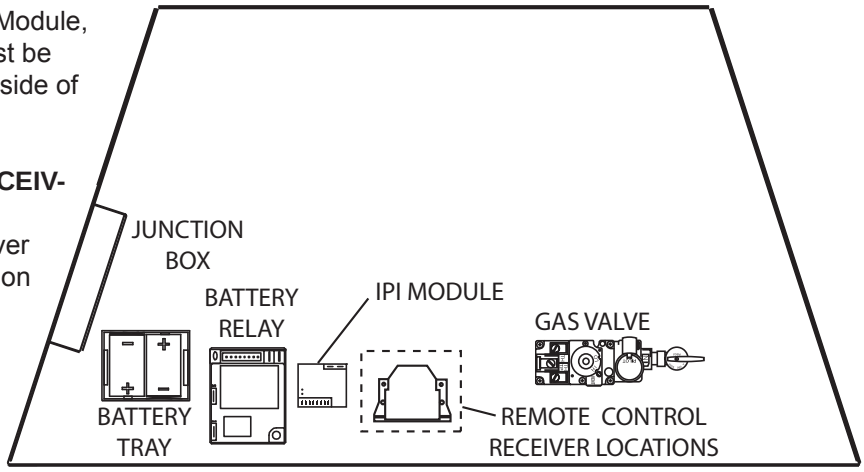

8.3 JUNCTION BOX INSTALLATION

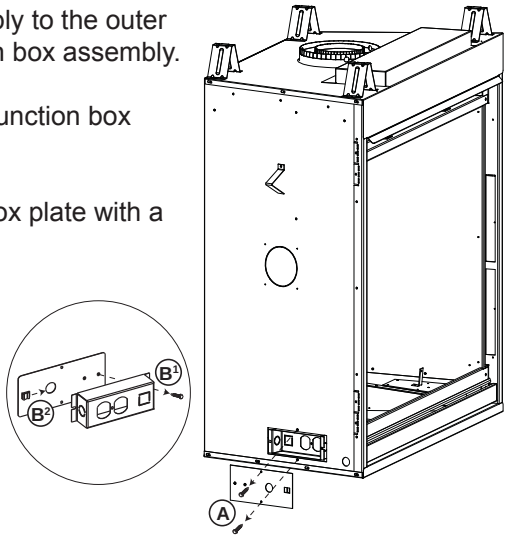

8.3.1 Remove the two screws that secure the junction box assembly to the outer shell on the left side of the fire place and remove the junction box assembly.

8.3.2 Remove the one screw that secures the junction box to the junction box plate and slide off the clip.

8.3.3 Route the supply wire through the 7/8” hole of the junction box plate with a box connector (not supplied).

8.3.4 Connect the 120 volt supply wire to the receptacle as per the CSA C22.1 Canadian Electrical Code in Canada or the ANSI/NFPA 70-1996 National Electrical Code in the United States.

8.3.5 Once the wiring is complete, re-install the junction box to the junction box plate and re-secure the screw that was removed in step B.

8.3.6 Re-install the junction box assembly by reversing step A making sure all plugs are secure in the junction box.

<u>NOTE:</u> If the appliance is already installed inside the enclosure, you can access the junction box from inside the appliance by removing the burner base assembly, see “ACCESSING THE BLOWER” section.

8.4 WIRING DIAGRAM

⚠ WARNING

DO NOT WIRE 110 VOLTS TO THE VALVE OR WALL SWITCH.

A wall switch must be installed in a convenient location for the burner operation.
The recommended maximum lead length depends on the wire size:

WIRE SIZE	MAX. LENGTH
14 gauge	100 feet
16 gauge	60 feet
18 gauge	40 feet

A 20' length of wire is connected to the main burner switch leads. Connect this wire to the wall switch or thermostat. However if a greater length is required route 2-strand (solid core) wire through the electrical hole located at the bottom left side of the appliance.

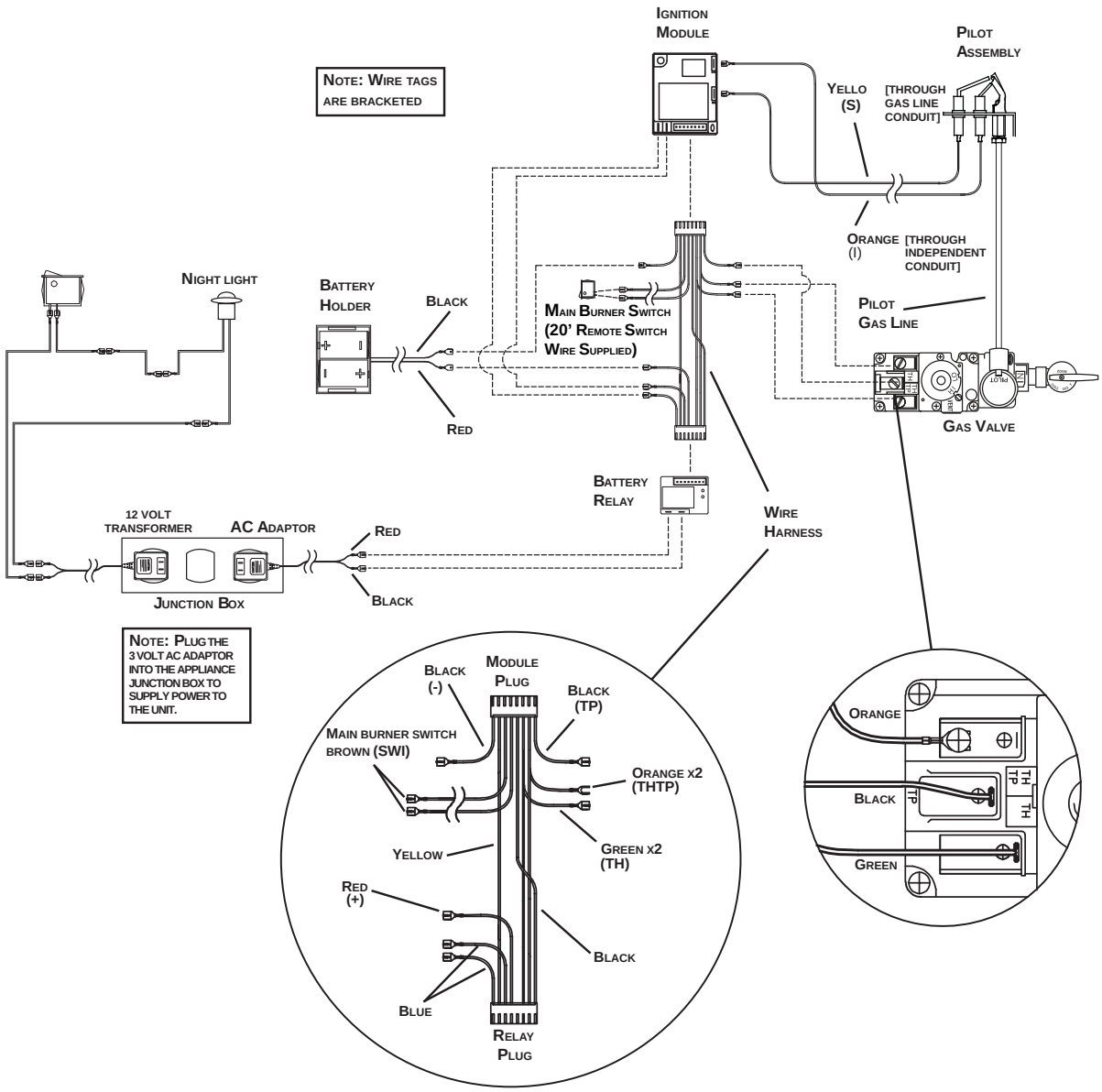

9.0 OPERATION

⚠ WARNING

IF YOU DO NOT FOLLOW THESE INSTRUCTIONS EXACTLY, A FIRE OR EXPLOSION MAY RESULT CAUSING PROPERTY DAMAGE, PERSONAL INJURY OR LOSS OF LIFE.

ALWAYS LIGHT THE PILOT WHETHER FOR THE FIRST TIME OR IF THE GAS SUPPLY HAS RUN OUT WITH THE GLASS DOOR OPENED OR REMOVED.

Ensure that a continuous gas flow is at the burner before installing the door. When lit for the first time, the appliance will emit an odor for a few hours. This is a normal temporary condition caused by the "burn-in" of paints and lubricants used in the manufacturing process and will not occur again. After extended periods of non-operation such as following a vacation or a warm weather season, the appliance may emit a slight odor for a few hours. This is caused by dust particles in the heat exchanger burning off. In both cases, open a window to sufficiently ventilate the room.

FOR YOUR SAFETY READ BEFORE LIGHTING:

A. This appliance is equipped with an ignition device which automatically lights he pilot. Do not try to light by hand.
B. Before operating smell all around the appliance area for gas and next to the floor because some gas is heavier than air and will settle on the floor.
C. Use only your hand to turn the gas control knob. Never use tools. If the knob will not turn by hand, do not try to repair it. Call a qualified service technician. Force or attempted repair may result in a fire or explosion.
D. Do not use this appliance if any part has been under water. Immediately call a qualified service technician to inspect the appliance and replace any part of the control system and any gas control which has been under water.

WHAT TO DO IF YOU SMELL GAS:

- Turn off all gas to the appliance.
- Open windows.
- Do not try to light any appliance.
- Do not touch any electric switch; do not use any phone in your building.
- Immediately call your gas supplier from a neighbor's phone. Follow the gas supplier's instructions.
- If you cannot reach your gas supplier, call the fire department.

LIGHTING INSTRUCTIONS:

1. Stop! Read the above safety information on this label.
2. Turn remote wall switch to off position.
3. Turn off all electrical power to the appliance and remove batteries.
4. This appliance is equipped with an ignition device which automatically lights the pilot. Do not try to light the pilot by hand.
5. Turn manual shutoff valve clockwise to off.
6. Open the glass door.
7. Wait five (5) minutes to clear out any gas. If you smell gas including near the floor, STOP! Follow “B” in the above safety information on this label. If you don’t smell gas go to the next step.
8. Close the glass door.
9. Turn manual shutoff valve counter-clockwise to on.
10. Turn on all electrical power to the appliance and re-install batteries.
11. Turn on remote wall switch to on position.
12. If appliance will not operate, follow instructions “TO TURN OFF GAS” and call your service technician or gas supplier.

Manual Shut-off Valve Shown in “OFF” position.

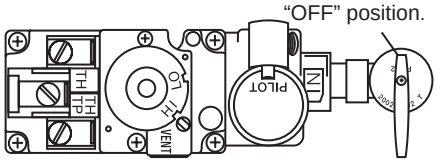

TO TURN OFF GAS

1. Turn off remote wall switch to the appliance.
2. Turn off all electrical power to the appliance if service is to be performed.
3. Turn manual shutoff valve clockwise to off. Do not force.

47.6

10.0 ADJUSTMENT

10.1 PRESSURE ADJUSTMENT

Inlet pressure can be checked by turning screw (A) counter-clockwise until loosened and then placing pressure gauge tubing over the test point. Gauge should read 7” (minimum 4.5”) water column for natural gas or 13” (11” minimum) water column for propane. Check that main burner is operating on “HI”.
Outlet pressure can be checked the same as above using screw (B). Gauge should read 3.5” water column for natural gas or 10” water column for propane. Check that main burner is operating on “HI”.
AFTER TAKING PRESSURE READINGS, TIGHTEN SCREWS FIRMLY TO SEAL. DO NOT OVER TORQUE. LEAK TEST.

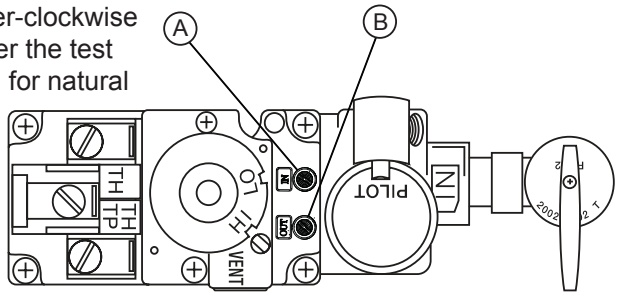

38.1

10.2 VENTURI ADJUSTMENT

This appliance has an air shutter that has been factory set open according to the chart below:

Regardless of venturi orientation, closing the air shutter will cause a more yellow flame, but can lead to carboning. Opening the air shutter will cause a more blue flame, but can cause flame lifting from the burner ports. The flame may not appear yellow immediately; allow 15 to 30 minutes for the final flame color to be established.

AIR SHUTTER ADJUSTMENT MUST ONLY BE DONE BY A QUALIFIED INSTALLER!

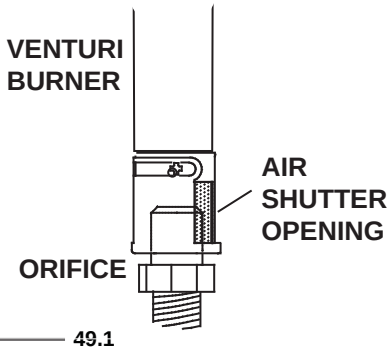

49.1

To access the air shutter, remove the control access panel, remove the glass door assembly and carefully remove the log set. Remove the four screws attached to the burner pan. Slide the burner pan to the left roughly 1” then lift up.

Air shutters have been factory set open according to the Venturi Adjustment Chart. These settings are for (maximum) horizontal termination. Adjustment may be required depending on fuel type, vent configuration and altitude.

VENTURI ADJUSTMENT CHART	
FUEL	**HDX40**
NG	3/16”
LP	7/16”

10.3 FLAME ADJUSTMENT

Temperature adjustment is accomplished by rotating the Hi/Lo knob located near the centre of the gas control.

Turn Counterclockwise to decrease flame height

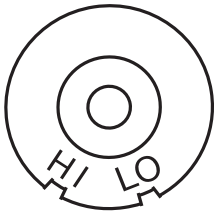

Turn Clockwise to increase flame height

10.4 FLAME CHARACTERISTICS

It's important to periodically perform a visual check of the pilot and burner flames. Compare them to the illustrations provided. If any flames appear abnormal call a service person.

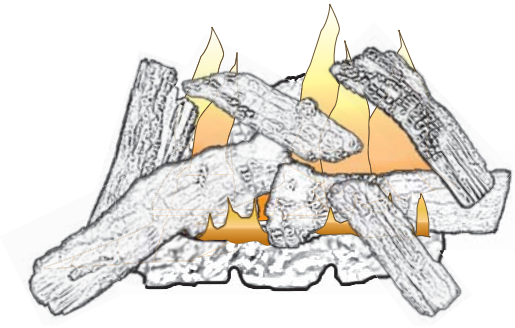

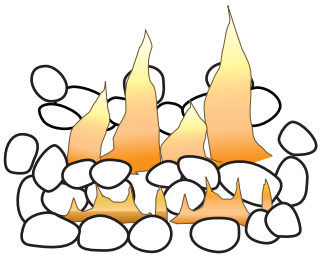

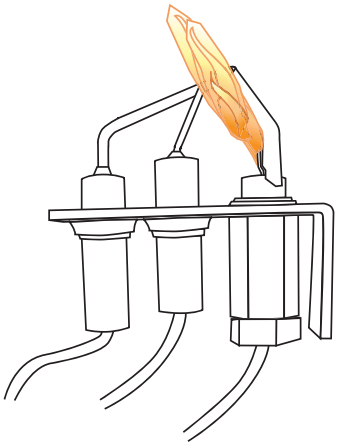

54.3

11.0 MAINTENANCE

⚠ WARNING

TURN OFF THE GAS AND ELECTRICAL POWER BEFORE SERVICING THE APPLIANCE.

APPLIANCE MAY BE HOT, DO NOT SERVICE UNTIL APPLIANCE HAS COOLED.

DO NOT USE ABRASIVE CLEANERS.

CAUTION: Label all wires prior to disconnection when servicing controls. Wiring errors can cause improper and dangerous operation. Verify proper operation after servicing. This appliance and its venting system should be inspected before use and at least annually by a qualified service person. The appliance area must be kept clear and free of combustible materials, gasoline or other flammable vapors and liquids. The flow of combustion and ventilation air must not be obstructed.

1. In order to properly clean the burner and pilot assembly, remove the logs, rocks and/or glass to expose both assemblies.
2. Keep the control compartment, media, burner, air shutter opening and the area surrounding the logs clean by vacuuming or brushing, at least once a year.
3. Check to see that all burner ports are burning. Clean out any of the ports which may not be burning or are not burning properly.
4. Check to see that the pilot flame is large enough to engulf the flame sensor and/or thermocouple / thermopile as well as reaches the burner.
5. Replace the cleaned logs, rocks or glass. Failure to properly position the media may cause carboning which can be distributed in the surrounding living area.
6. Check to see that the main burner ignites completely on all openings when turned on. A 5 to 10 second total light-up period is satisfactory. If ignition takes longer, consult your local authorized dealer / distributor.
7. Check that the gasketing on the sides, top and bottom of the door is not broken or missing. Replace if necessary.
8. If for any reason the vent air intake system is disassembled, re-install and re-seal per the instructions provided for the initial installation.

40.1

11.1 LAMP REPLACEMENT

This appliance comes equipped with our “Night Light™”. If in the event the lamp needs to be replaced, follow these instructions.

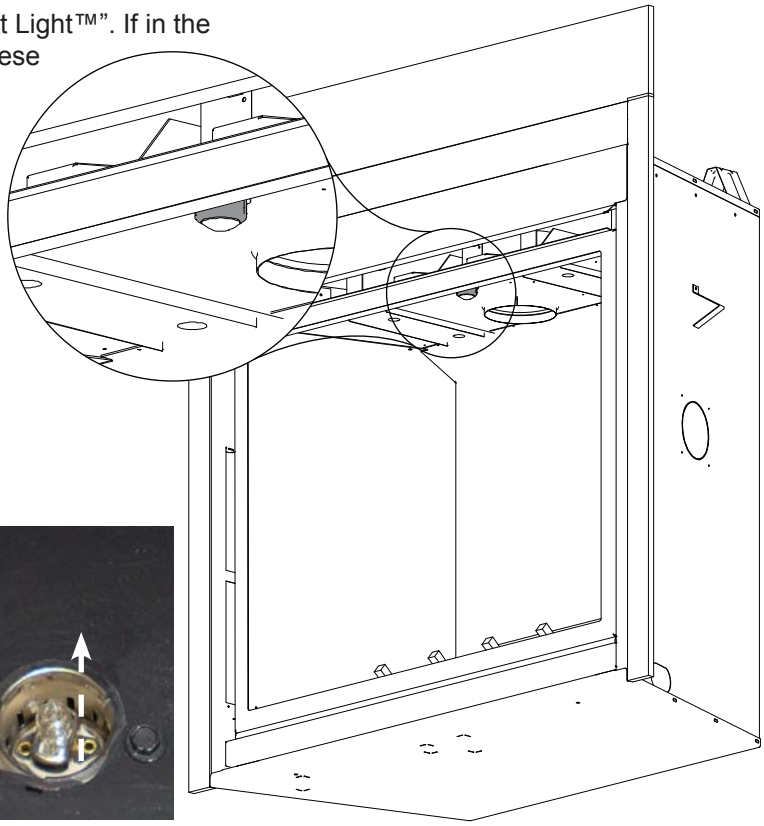

11.1.1 Turn off all electrical supply.

11.1.2 Remove the glass door, see “DOOR REMOVAL / INSTALLATION” section.

11.1.3 Unscrew the lens cover and lift the lamp straight out. Replace with Wolf Steel Ltd. parts only (W387-0013).

11.1.4 **<u>NOTE:</u> Do not handle the lamp with bare fingers, protect with a clean dry cloth.**

11.1.5 Replace lens cover.

11.1.6 Replace glass door.

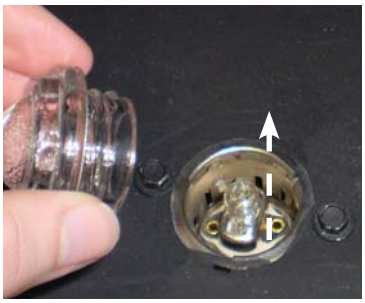

11.2 DOOR GLASS REPLACEMENT

⚠ WARNING

DO NOT USE SUBSTITUTE MATERIALS.

GLASS MAY BE HOT, DO NOT TOUCH GLASS UNTIL COOLED.

CARE MUST BE TAKEN WHEN REMOVING AND DISPOSING OF ANY BROKEN DOOR GLASS OR DAMAGED COMPONENTS. BE SURE TO VACUUM UP ANY BROKEN GLASS FROM INSIDE THE APPLIANCE BEFORE OPERATION.

DO NOT STRIKE, SLAM OR SCRATCH GLASS. DO NOT OPERATE APPLIANCE WITH GLASS REMOVED, CRACKED, BROKEN OR SCRATCHED.

Only available as an assembly complete with gasket. Glass not available separately.

11.2.1 Place the door frame down careful not to scratch the paint.

11.2.2 Bend up the glass retainers being careful not to snap them.

11.2.3 Remove the glass from the frame.
<u>NOTE:</u> Care must be taken when removing and disposing of any broken glass or damaged components. Be sure to vacuum up any broken glass from inside the appliance before operation.

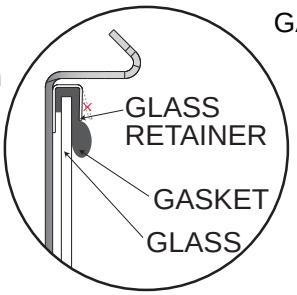

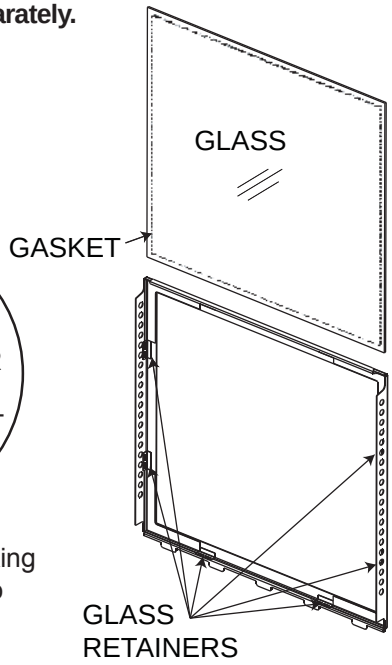

11.2.4 Center the gasketed glass inside the door frame with the thick side of the gasket facing up.

11.2.5 Bend the glass retainers located along the edge of the door frame over the gasket holding the glass in place making sure that the thick portion is protruding past the retainer. Careful not to break the glass.

11.3 CARE OF GLASS

DO NOT CLEAN GLASS WHEN HOT! DO NOT USE ABRASIVE CLEANERS TO CLEAN GLASS.

Buff lightly with a clean dry soft cloth. Clean both sides of the glass after the first 10 hours of operation with a recommended fireplace glass cleaner. Thereafter clean as required. If the glass is not kept clean permanent discoloration and / or blemishes may result.

⚠ WARNING

HOT GLASS WILL CAUSE BURNS.

DO NOT TOUCH GLASS UNTIL COOLED.

NEVER ALLOW CHILDREN TO TOUCH GLASS.

5.1

11.4 CARE OF PLATED PARTS

If the appliance is equipped with plated parts, you must clean fingerprints or other marks from the plated surfaces before operating the appliance for the first time. Use a glass cleaner or vinegar and towel to clean. If not cleaned properly before operating for the first time, the marks can cause permanent blemishes on the plating. After the plating is cured, the fingerprints and oils will not affect the finish and little maintenance is required, just wipe clean as needed. Prolonged high temperature burning with the door ajar may cause discolouration on plated parts.
<u>NOTE:</u> The protective wrap on plated parts is best removed when the assembly is at room temperature but this can be improved if the assembly is warmed, using a hair dryer or similar heat source.

6.1

12.0 REPLACEMENT PARTS

Contact your dealer or the factory for questions concerning prices and policies on replacement parts. Normally all parts can be ordered through your Authorized dealer / distributor.

FOR WARRANTY REPLACEMENT PARTS, A PHOTOCOPY OF THE ORIGINAL INVOICE WILL BE REQUIRED TO HONOUR THE CLAIM.

When ordering replacement parts always give the following information:

- Model & Serial Number of appliance
- Installation date of appliance
- Part number
- Description of part
- Finish

*** IDENTIFIES ITEMS WHICH ARE NOT ILLUSTRATED. FOR FURTHER INFORMATION, CONTACT YOUR AUTHORIZED DEALER.**

WARNING

FAILURE TO POSITION THE PARTS IN ACCORDANCE WITH THIS MANUAL OR FAILURE TO USE ONLY PARTS SPECIFICALLY APPROVED WITH THIS APPLIANCE MAY RESULT IN PROPERTY DAMAGE OR PERSONAL INJURY.

41.1

COMPONENTS		
REF	**PART NO.**	**DESCRIPTION**
1a	W725-0032	DEXEN VALVE 3V NATURAL GAS
1b	W725-0049	DEXEN VALVE 3V PROPANE
2a	W100-0069	PILOT ASSEMBLY PSE - NG
2b	W100-0093	PILOT ASSEMBLY PSE - LP
3*	W720-0092	PILOT TUBE PSE
4a	W455-0049	PILOT INJECTOR PSE - LP
4b	W455-0071	PILOT INJECTOR PSE - NG
5*	W010-1859	BLACK DOOR FRAME
6	W010-2281	GLASS C/W GASKET
7	W010-2280	BLACK DOOR C/W GLASS
8	W456-0031 (#31)	ORIFICE NATURAL GAS
9	W456-0051 (#51)	ORIFICE PROPANE GAS
10	W010-1800	FIRESTOP SPACER
11*	W385-0334	NAPOLEON® LOGO
12*	W750-0193	20 FT WIRE
13*	W361-0016	GLOWING EMBERS
14*	W290-0140	GAS LINE ACCESS GASKET
15*	W290-0139	BURNER TRAIN GASKET
16*	W010-2313	ASSY, REPLACEMENT BURNER
17	GL- 674	LOG SET
18	W135-0444	REAR LOG
19	W135-0445	MIDDLE LOG
20	W135-0446	LEFT LOG
21	W135-0447	RIGHT LOG
22	W135-0448	CHARCOAL STRIP LOG
23	W135-0449	FRONT LOG
24	W135-0450	FRONT LEFT LOG
25	W135-0451	FRONT RIGHT LOG
26*	W550-0006	5LBS LAVA ROCK

ACCESSORIES		
REF	**PART NO.**	**DESCRIPTION**
27*	W573-0007	10.3 OZ TUBE HIGH TEMP SEALANT MILPAC
28	GZ550-1KT	BLOWER KIT
29*	B440-KT	BLOWER KIT

ACCESSORIES		
REF	**PART NO.**	**DESCRIPTION**
30*	W500-0033	VARIABLE SPEED SWITCH WALL MOUNTING PLATE
31*	W690-0005	THERMOSTAT, 110 VOLT FOR USE WITH GA-566
32*	W660-0026	PROGRAMMABLE TIMER
33	GA-566	HOT AIR KIT
34	GA-72	HOT AIR EXHAUST KIT
35	GA-70	EXTENSION KIT 5 FT
36*	270	PAINT, BLACK-13 OZ
37*	W175-0166	5” COUPLER
38*	W175-0002	8” COUPLER
39	GD-501	HEAT GUARD
40*	W175-0325	CONVERSION KIT - NG TO LP
41*	W175-0324	CONVERSION KIT - LP TO NG
42*	GD842KT-1	DECORATIVE BRICK PANELS - SANDSTONE
43*	PRPH40	PORCELAIN REFLECTIVE RADIANT PANELS
44*	HD540KT	FACE PLATE WITH OPERABLE SCREEN DOORS
45*	ANIH	ANDIRONS
46*	W660-0081	THERMOSTAT WALL MOUNT - DIGITAL
47*	F40	ON/OFF HAND HELD REMOTE CONTROL
47*	F40-6	ON/OFF HAND HELD REMOTE CONTROL - BULK OF 6
48*	F50	ON/OFF HAND HELD REMOTE CONTROL
48*	F50-6	ON/OFF HAND HELD REMOTE CONTROL - BULK OF 6
49*	HDF40K	4 - SIDED FRAME - BLACK
49*	HDF40N	4 - SIDED FRAME - BROWN
49*	HDF40P	4 - SIDED FRAME - PEWTER
50*	GPV	SEE LOCAL AUTHORIZED DEALER / DISTRIBUTOR
51	RAK35/40	RIVER ROCK MEDIA TRAY - SATIN CHROME DECORATIVE FENDER
52*	TBHD40K	BEVELLED TRIM KIT - BLACK
52*	TBHD40SS	BEVELLED TRIM KIT - STAINLESS STEEL
53*	GD848KT	DECORATIVE BRICK PANELS - NEW PORT
54*	ACS-1	ANTI CONDENSATION SWITCH
55*	GD 845KT-1	DECORATIVE BRICK PANELS - MAYAN DESERT SANDSTONE
56*	PRPHR40	PORCELAIN REFLECTIVE RADIANT PANELS - RIBBED
57	MKRY	MEDIA KIT, GREY RIVER ROCKS
57	MKRM	MEDIA KIT, MULTI-COLOURED RIVER ROCKS

FLEXIBLE VENT KITS		
REF	**PART NO.**	**DESCRIPTION**
58*	GD-420 (5FT)	5” / 8” VENT KIT - (5FT)
59*	GD-430 (10FT)	5” / 8” VENT KIT - (10FT)
60*	W010-0370	WALL SUPPORT ASSEMBLY

TERMINAL KITS		
REF	**PART NO.**	**DESCRIPTION**
61	GD-401	PERISCOPE
62	GD422-1	WALL TERMINAL KIT
63	GD422R-1	ROUND WALL TERMINAL KIT

ROOF TERMINAL KITS		
REF	**PART NO.**	**DESCRIPTION**
64*	GD-410	1/12 TO 7/12 PITCH
65*	GD-411	8/12 TO 12/12 PITCH
66*	GD-412	FLAT ROOF
67*	W490-0074	5/8 INNER/OUTER SLEEVE
68	W670-0007	5/8 TERMINAL
69	W170-0086	STORM COLLAR
70	W010-0453	ROOF SUPPORT
71	W263-0066	ROOF FLASHING 1/12 TO 7/12 PITCH
72	W263-0055	ROOF FLASHING 8/12 TO 12/12 PITCH
73	W263-0065	ROOF FLASHING FLAT ROOF

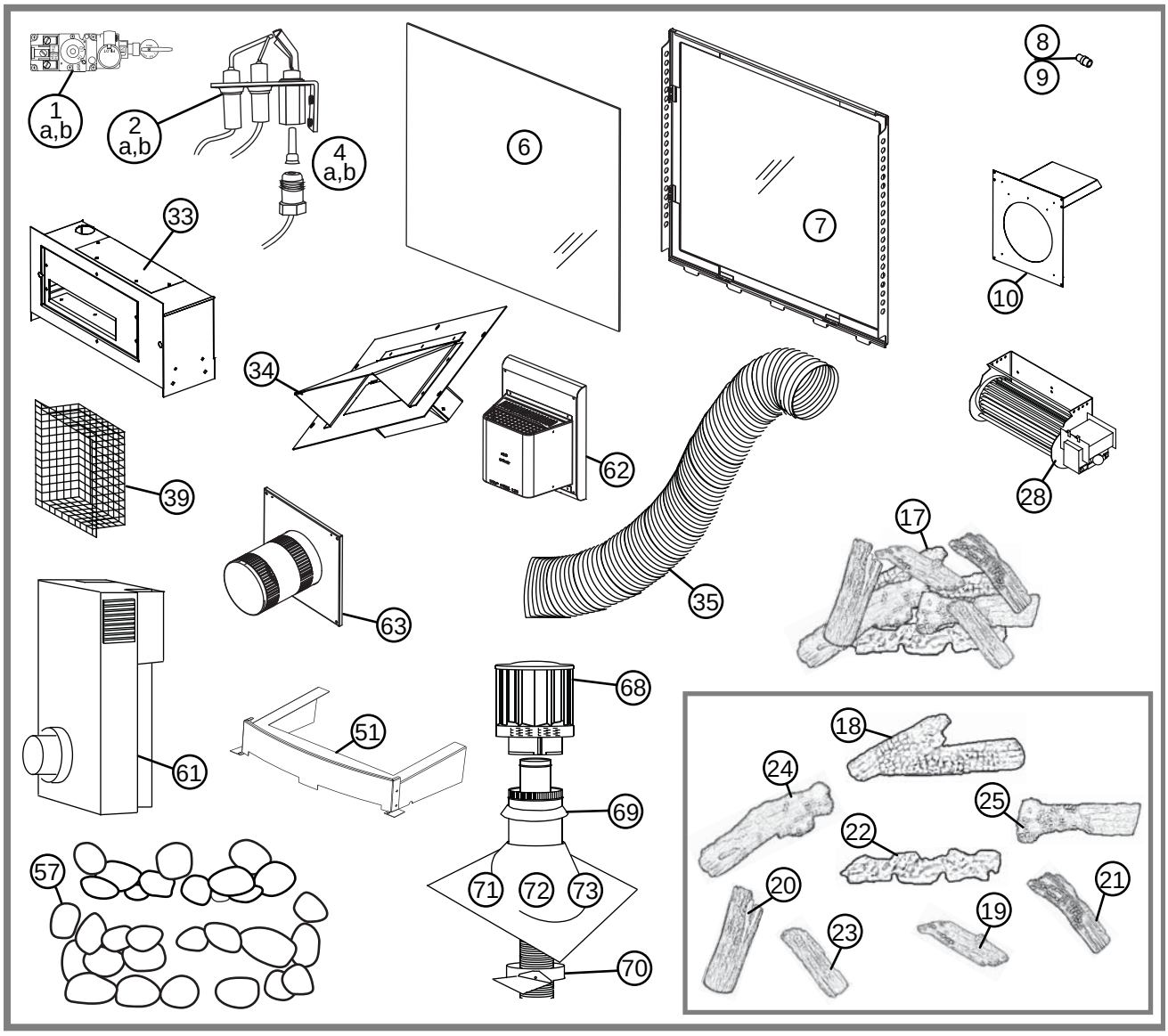

13.0 TROUBLESHOOTING

⚠ WARNING

ALWAYS LIGHT THE PILOT WHETHER FOR THE FIRST TIME OR IF THE GAS SUPPLY HAS RAN OUT, WITH THE GLASS DOOR OPEN OR REMOVED.

TURN OFF THE GAS AND ELECTRICAL POWER BEFORE SERVICING THE APPLIANCE.

APPLIANCE MAY BE HOT, DO NOT SERVICE UNTIL APPLIANCE HAS COOLED.

DO NOT USE ABRASIVE CLEANERS.

SYMPTOM	PROBLEM	TEST SOLUTION
Pilot will not light. Makes noise with no spark at pilot burner. 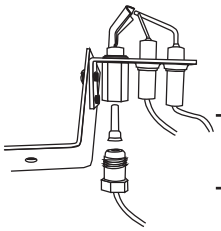	Wiring.	- Verify the “S” wire for the sensor and the “I” wire for the ignitor are connected to the terminals on the module and pilot assembly.
	Loose connection.	- Verify no loose connections, electrical shorts in the wiring or ground out to any metal object.
	Module.	- Turn the ON/OFF switch to the “OFF” position. Remove the igniter wire “I” from the module. Place the ON/OFF switch to the “ON” position. Hold a grounded wire about 3/16” away from the “I” terminal on the module. If no spark, the module must be replaced. If there is a spark, the module is fine. Inspect pilot assembly for a shorted wire or cracked insulator around the electrode.
	Igniter Spark gap is incorrect.	- Spark gap of the ignitor to the pilot should be .12” or 1/8”
	Transformer.	- Verify the transformer is installed and plugged into the relay box. Check voltage of the transformer under load at the spade connections on the relay box with the ON/OFF switch in the “ON” position. Acceptable readings of a good transformer are between 2.8 and 3.4 volts A.C.
	A shorted or loose Connection.	- Remove and reinstall the wiring harness that plugs into the module. Remove and verify continuity of each wire in wiring harness.
	Battery backup	- Check batteries.
	Improper switch wiring.	- Troubleshoot the system with the simplest ON/OFF switch.
Pilot sparks but will not light.	Gas supply.	- Verify that the incoming gas line ball valve is “Open”. Verify that the inlet pressure reading is within acceptable limits, inlet pressures must not exceed 13” W.C. (7” W.C. for NG and 13” W.C. for LP).
	Out of propane gas.	- Fill the tank.
Carbon is being deposited on glass, logs, rocks, media or combustion chamber surfaces.	Air shutter has become blocked.	- Ensure air shutter opening is free of lint or other obstructions. - Ensure air shutter is properly set.
	Flame is impinging on the glass, logs, rocks, media or combustion chamber.	- Check that the glass, logs, rocks or media are correctly positioned. - Open air shutter to increase the primary air. - Check the input rate: check the manifold pressure and orifice size as specified by the rating plate. - Check that the door gasketing is not broken or missing and that the seal is tight. - Check that both vent liners are free of holes and well sealed at all joints. - Check that minimum rise per foot has been adhered to for any horizontal venting.

Obadiah's · 406-300-1776

SYMPTOM	PROBLEM	TEST SOLUTION
Continues to spark and pilot lights, but main burner will not light.	Short or loose connection in sensor rod.	- Verify all connections. Verify the connections from the pilot assembly are tight; also verify these connections are not grounding out to any metal. - Verify the TH wires are connected to the valve.
	THTP	- Verify the THTP wires are connected to the valve.
	Poor flame rectification or contaminated sensor rod.	- Verify the flame is engulfing the sensor rod. This will increase the flame rectification. Verify correct pilot orifice is installed and inlet gas specifications to manual. (Remember, the flame carries the rectification current, not the gas. If the flame lifts from the pilot hood, the circuit is broken. A wrong orifice or too high of an inlet pressure can cause the pilot flame to lift). The sensor rod may need cleaning.
Pilot light stops sparking / pilot remains lit but burner will not turn on.	Wiring / connection.	- Inspect all wires, ensure good tight connections. Verify that all wiring is installed exactly as specified.
	Wiring harness.	- Inspect the wiring harness and verify the harness is tightly connected to the module. Verify that you have all wires connected and in the right order.
	Module or valve.	- Conduct the following test to verify if the problem is the module or valve. To measure voltages, turn the multimeter to “DC”, place the red lead from the multimeter to the screw on the terminal block for the wire you are checking, touch black lead to ground (valve body). Importantly, a “zero” volts reading does not automatically indicate a bad module, there may be too little resistance in the valve solenoid. Check if the green wires is disconnected from the valve. The voltage output from the module should be between 1.5 and 3 volts.
Exhaust fumes smelled in room, headaches.	Appliance is spilling.	- Check all seals.
Flames are very aggressive.	Door is ajar.	- Ensure door is secured properly.
	Venting action is too great.	- Check to ensure venting is properly sealed or restrict vent exit with restrictor plate. Restrictor plate not available in some models.
Main burner flame is a blue, lazy, transparent flame.	Blockage in vent.	- Remove blockage. In really cold conditions, ice buildup may occur on the terminal and should be removed as required.
White / grey film forms.	Sulphur from fuel is being deposited on glass, logs or combustion chamber surfaces.	- Clean the glass with a recommended appliance glass cleaner. **DO NOT CLEAN GLASS WHEN HOT!** If deposits are not cleaned off regularly, the glass may become permanently market.

42.13_2A

14.0 WARRANTY

NAPOLEON® products are manufactured under the strict Standard of the world recognized ISO 9001 : 2008 Quality Assurance Certificate.

NAPOLEON® products are designed with superior components and materials assembled by trained craftsmen who take great pride in their work. The burner and valve assembly are leak and test-fired at a quality test station. The complete heater is again thoroughly inspected by a qualified technician before packaging to ensure that you, the customer, receives the quality product that you expect from NAPOLEON®.

NAPOLEON® GAS FIREPLACE PRESIDENT'S LIFETIME LIMITED WARRANTY

The following materials and workmanship in your new NAPOLEON® gas heater are warranted against defects for as long as you own the heater. This covers: combustion chamber, heat exchanger, stainless steel burner, phazer™ logs and embers, rocks, ceramic glass (thermal breakage only), gold plated parts against tarnishing, porcelainized enameled components and aluminum extrusion trims.*

Electrical (110V and millivolt) components and wearable parts such as blowers, gas valves, thermal switch, switches, wiring, remote controls, ignitor, gasketing, and pilot assembly are covered and NAPOLEON® will provide replacement parts free of charge during the first year of the limited warranty.*

Labour related to warranty repair is covered free of charge during the first year. Repair work, however, requires the prior approval of an authorized company official. Labour costs to the account of NAPOLEON® are based on a predetermined rate schedule and any repair work must be done through an authorized NAPOLEON® dealer.

* Construction of models vary. Warranty applies only to components included with your specific heater.

CONDITIONS AND LIMITATIONS

NAPOLEON® warrants its products against manufacturing defects to the original purchaser only. Registering your warranty is not necessary. Simply provide your proof of purchase along with the model and serial number to make a warranty claim. NAPOLEON® reserves the right to have its representative inspect any product or part thereof prior to honouring any warranty claim. Provided that the purchase was made through an authorized NAPOLEON® dealer your heater is subject to the following conditions and limitations:

This factory warranty is non-transferable and may not be extended whatsoever by any of our representatives.

The gas heater must be installed by a licensed, authorized service technician or contractor. Installation must be done in accordance with the installation instructions included with the product and all local and national building and fire codes. This limited warranty does not cover damages caused by misuse, lack of maintenance, accident, alterations, abuse or neglect and parts installed from other manufacturers will nullify this warranty.

This limited warranty further does not cover any scratches, dents, corrosion or discoloring caused by excessive heat, abrasive and chemical cleaners nor chipping on porcelain enamel parts, mechanical breakage of PHAZER™ logs and embers.

NAPOLEON® warrants its stainless steel burners against defects in workmanship and material for life, subject to the following conditions: During the first 10 years NAPOLEON® will replace or repair the defective parts at our option free of charge. From 10 years to life, NAPOLEON® will provide replacement burners at 50% of the current retail price.

In the first year only, this warranty extends to the repair or replacement of warranted parts which are defective in material or workmanship provided that the product has been operated in accordance with the operation instructions and under normal conditions.

After the first year, with respect to this President's Lifetime Limited Warranty, NAPOLEON® may, at its discretion, fully discharge all obligations with respect to this warranty by refunding to the original warranted purchaser the wholesale price of any warranted but defective part(s).

NAPOLEON® will not be responsible for installation, labour or any other expenses related to the reinstallation of a warranted part and such expenses are not covered by this warranty.

Notwithstanding any provisions contained in the President's Lifetime Limited Warranty, NAPOLEON'S responsibility under this warranty is defined as above and it shall not in any event extend to any incidental, consequential or indirect damages.

This warranty defines the obligations and liability of NAPOLEON® with respect to the NAPOLEON® gas heater and any other warranties expressed or implied with respect to this product, its components or accessories are excluded.

NAPOLEON® neither assumes, nor authorizes any third party to assume, on its behalf, any other liabilities with respect to the sale of this product.

NAPOLEON® will not be responsible for: over-firing, downdrafts, spillage caused by environmental conditions such as rooftops, buildings, nearby trees, hills, mountains, inadequate vents or ventilation, excessive venting configurations, insufficient makeup air, or negative air pressures which may or may not be caused by mechanical systems such as exhaust fans, furnaces, clothes dryers, etc.

Any damages to heater, combustion chamber, heat exchanger, brass trim or other components due to water, weather damage, long periods of dampness, condensation, damaging chemicals or cleaners will not be the responsibility of NAPOLEON®.

ALL SPECIFICATIONS AND DESIGNS ARE SUBJECT TO CHANGE WITHOUT PRIOR NOTICE DUE TO ON-GOING PRODUCT IMPROVEMENTS. NAPOLEON® IS A REGISTERED TRADEMARK OF WOLF STEEL LTD. PATENTS U.S. 5.303.693.801 - CAN. 2.073.411, 2.082.915. © WOLF STEEL LTD.

Obadiah's · 406-300-1776

15.0 SERVICE HISTORY

Appliance Service History

This heater must be serviced annually depending on usage.

Date	Dealer Name	Service Technician Name	Service Performed	Special Concerns

16.0 NOTES

44.1