INSTALLER: LEAVE THIS MANUAL WITH THE APPLIANCE.
CONSUMER: RETAIN THIS MANUAL FOR FUTURE REFERENCE.

NAPOLEON®
QUALITY FIREPLACES

INSTALLATION AND OPERATING INSTRUCTIONS

CERTIFIED UNDER CANADIAN AND AMERICAN NATIONAL STANDARDS: CSA 2.33, ANSI Z21.88 FOR VENTED GAS FIREPLACE HEATERS.

CERTIFIED FOR CANADA AND UNITED STATES USING ANSI/CSA METHODS.

WHD31N
NATURAL GAS

WHD31P
PROPANE

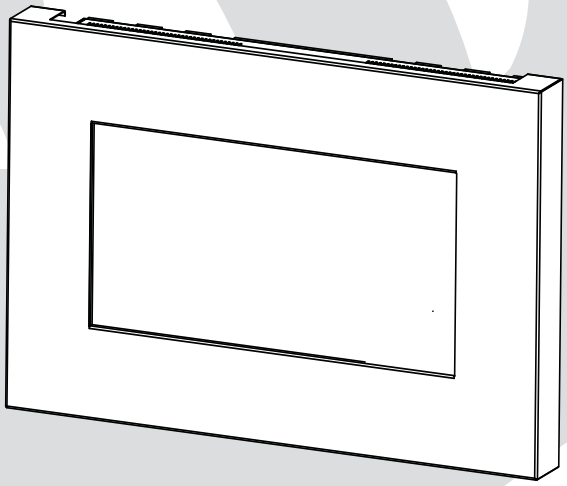

SAFETY INFORMATION

⚠ WARNING

If the information in these instructions are not followed exactly, a fire or explosion may result causing property damage, personal injury or loss of life.

- Do not store or use gasoline or other flammable vapors and liquids in the vicinity of this or any other appliance.
- WHAT TO DO IF YOU SMELL GAS:

- **Do not try to light any appliance.**
- **Do not touch any electrical switch; do not use any phone in your building.**
- **Immediately call your gas supplier from a neighbour's phone. Follow the gas supplier's instructions.**
- **If you cannot reach your gas supplier, call the fire department.**

- Installation and service must be performed by a qualified installer, service agency or the supplier.

This appliance may be installed as an OEM installation in manufactured home (USA only) or mobile home and must be installed in accordance with the manufacturer's instructions and the Manufactured Home Construction and Safety Standard, Title 24 CFR, Part 3280, in the United States or the Standard for Installation in Mobile Homes, CAN/CSA Z240 MH, in Canada.

This appliance is only for use with the type(s) of gas indicated on the rating plate. A conversion kit is supplied with the appliance.

⚠ WARNING

HOT GLASS WILL CAUSE BURNS.

DO NOT TOUCH GLASS UNTIL COOLED.

NEVER ALLOW CHILDREN TO TOUCH GLASS.

APPLY SERIAL NUMBER LABEL FROM CARTON

Serial No. XXXXXX000000
MODEL NO.

HPBA Hearth, Patio & Barbecue Association

GO GREEN ECO FRIENDLY TECHNOLOGY

Quality System Certified To ISO 9001-2008

C ETL LISTED US Intertek

Wolf Steel Ltd., 24 Napoleon Rd., Barrie, ON, L4M 0G8 Canada /
103 Miller Drive, Crittenden, Kentucky, USA, 41030
Phone (705)721-1212 • Fax (705)722-6031 • www.napoleonfireplaces.com • ask@napoleonproducts.com

$10.00

1.28A

Obadiah's · 406-300-1776

TABLE OF CONTENTS

1.0	INSTALLATION OVERVIEW	3
2.0	**INTRODUCTION**	**4**
2.1	DIMENSIONS	5
2.1.1	CONVEX SURROUND (S31CV)	5
2.1.2	RECTANGULAR SURROUND (S31R)	5
2.2	GENERAL INSTRUCTIONS	6
2.3	GENERAL INFORMATION	7
2.4	RATING PLATE INFORMATION	7
3.0	**VENTING**	**8**
3.1	VENTING LENGTHS AND COMPONENTS	9
3.2	TYPICAL VENT INSTALLATION	10
3.3	SPECIAL VENT INSTALLATIONS	11
3.3.1	PERISCOPE TERMINATION	11
3.4	VENT TERMINAL CLEARANCES	12
3.5	VENTING APPLICATION FLOW CHART	13
3.6	DEFINITIONS	13
3.7	ELBOW VENT LENGTH VALUES	13
3.8	HORIZONTAL TERMINATION	14
3.9	VERTICAL TERMINATION	16
4.0	**INSTALLATION**	**18**
4.1	WALL AND CEILING PROTECTION	18
4.2	HORIZONTAL INSTALLATION	19
4.3	USING FLEXIBLE VENT COMPONENTS	20
4.3.1	APPLIANCE VENT CONNECTION	20
4.3.2	HORIZONTAL AIR TERMINAL INSTALLATION	21
4.3.3	VERTICAL INSTALLATION	21
4.3.4	VERTICAL AIR TERMINAL INSTALLATION (FLEXIBLE)	22
4.4	USING RIGID VENT COMPONENTS	23
4.4.1	HORIZONTAL AIR TERMINAL INSTALLATION	23
4.4.2	EXTENDED HORIZONTAL AND CORNER TERMINAL INSTALLATION	23
4.4.3	VERTICAL AIR TERMINAL INSTALLATION (RIGID)	24
4.5	MOUNTING THE APPLIANCE	25
4.6	GAS INSTALLATION	25
4.7	MOBILE HOME	26
4.8	MINIMUM CLEARANCE TO COMBUSTIBLES	27
5.0	**FINISHING**	**28**
5.1	HOUSING PANEL INSTALLATION	28
5.2	DOOR REMOVAL / INSTALLATION	29
5.3	BRICK PANEL INSTALLATION	29
5.4	GLASS MEDIA	30
5.5	SURROUND INSTALLATION / REMOVAL	30
6.0	**OPTIONAL INSTALLATION**	**31**
6.1	SAFETY SCREEN INSTALLATION	31
6.2	RECEIVER LOCATION/WIRING	31
7.0	**ELECTRICAL INFORMATION**	**32**
7.1	HARD WIRING CONNECTION	32
7.2	WIRING DIAGRAM	32
8.0	**OPERATION**	**33**
8.1	OPERATING INSTRUCTIONS	33
8.2	LIGHTING INSTRUCTIONS	33
9.0	**ADJUSTMENTS**	**34**
9.1	PILOT BURNER ADJUSTMENT	34
9.2	VENTURI ADJUSTMENT	34
9.3	FLAME CHARACTERISTICS	35
10.0	**MAINTENANCE**	**35**
10.1	CARE OF GLASS	35
10.2	CARE OF PLATED PARTS	36
10.3	DOOR GLASS REPLACEMENT	36
11.0	**REPLACEMENTS**	**37**
12.0	**TROUBLESHOOTING**	**40**
13.0	**WARRANTY**	**43**
14.0	**SERVICE HISTORY**	**44**

NOTE: Changes, other than editorial, are denoted by a line in the margin.

1.0 INSTALLATION OVERVIEW

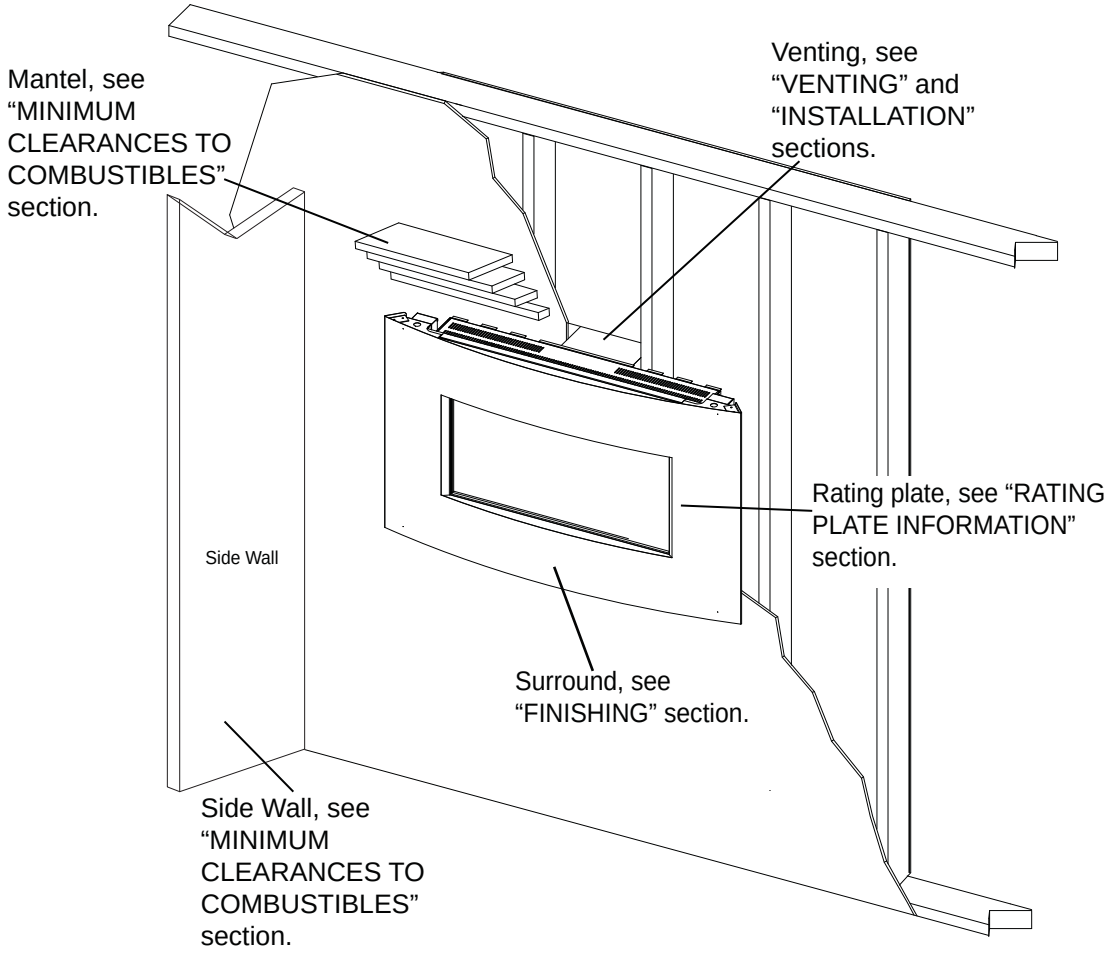

2.0 INTRODUCTION

⚠ WARNING

- **THIS APPLIANCE IS HOT WHEN OPERATED AND CAN CAUSE SEVERE BURNS IF CONTACTED.**
- **ANY CHANGES OR ALTERATIONS TO THIS APPLIANCE OR ITS CONTROLS CAN BE DANGEROUS AND IS PROHIBITED.**
- Do not operate appliance before reading and understanding operating instructions. Failure to operate appliance according to operating instructions could cause fire or injury.
- Risk of fire or asphyxiation do not operate appliance with fixed glass removed.
- Do not connect 110 volts to the control valve.
- Risk of burns. The appliance should be turned off and cooled before servicing.
- Do not install damaged, incomplete or substitute components.
- Risk of cuts and abrasions. Wear protective gloves and safety glasses during installation. Sheet metal edges may be sharp.
- Do not burn wood or other materials in this appliance.
- Children and adults should be alerted to the hazards of high surface temperature and should stay away to avoid burns or clothing ignition.
- Young children should be carefully supervised when they are in the same room as the appliance. Toddlers, young children and others may be susceptible to accidental contact burns. A physical barrier is recommended if there are at risk individuals in the house. To restrict access to an appliance, install an adjustable safety gate to keep toddlers, young children and other at risk individuals out of the room and away from hot surfaces.
- Clothing or other flammable material should not be placed on or near the appliance.
- Due to high temperatures, the appliance should be located out of traffic and away from furniture and draperies.
- Ensure you have incorporated adequate safety measure to protect infants/toddlers from touching hot surfaces.
- Even after the appliance is out, the glass and/or screen will remain hot for an extended period of time.
- Check with your local hearth specialty dealer for safety screens and hearth guards to protect children from hot surfaces. These screens and guards must be fastened to the floor.
- Any safety screen or guard removed for servicing must be replaced prior to operating the appliance.
- The appliance is a vented gas-fired appliance. Do not burn wood or other materials in the appliance
- It is imperative that the control compartments, burners and circulating blower and its passageway in the appliance and venting system are kept clean. The appliance and its venting system should be inspected before use and at least annually by a qualified service person. More frequent cleaning may be required due to excessive lint from carpeting, bedding material, etc. The appliance area must be kept clear and free from combustible materials, gasoline and other flammable vapors and liquids.
- Under no circumstances should this appliance be modified.
- This appliance must not be connected to a chimney flue pipe serving a separate solid fuel burning appliance.
- Do not use this appliance if any part has been under water. Immediately call a qualified service technician to inspect the appliance and to replace any part of the control system and any gas control which has been under water.
- Do not operate the appliance with the glass door removed, cracked or broken. Replacement of the glass should be done by a licensed or qualified service person.
- Do not strike or slam shut the appliance glass door.
- When equipped with pressure relief doors, they must be kept closed while the appliance is operating to prevent exhaust fumes containing carbon monoxide, from entering into the home. Temperatures of the exhaust escaping through these openings can also cause the surrounding combustible materials to overheat and catch fire.
- Only doors / optional fronts certified with the unit are to be installed on the appliance.
- Keep the packaging material out of reach of children and dispose of the material in a safe manner. As with all plastic bags, these are not toys and should be kept away from children and infants.
- As with any combustion appliance, we recommend having your appliance regularly inspected and serviced as well as having a Carbon Monoxide Detector installed in the same area to defend you and your family against Carbon Monoxide.
- Ensure clearances to combustibles are maintained when building a mantel or shelves above the appliance. Elevated temperatures on the wall or in the air above the appliance can cause melting, discolouration or damage of decorations, a T.V. or other electronic components.

3.2B

2.1 DIMENSIONS

2.1.1 CONVEX SURROUND (S31CV)

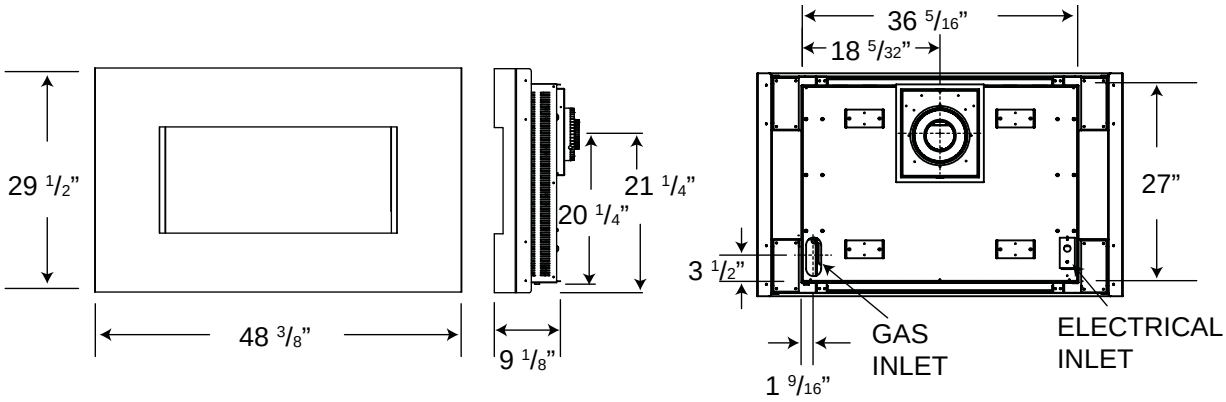

2.1.2 RECTANGULAR SURROUND (S31R)

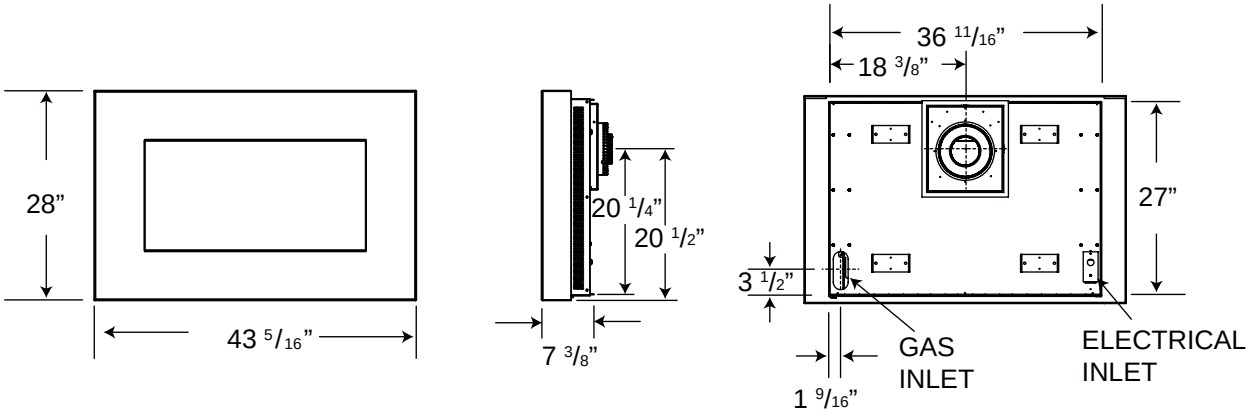

2.2 GENERAL INSTRUCTIONS

⚠ WARNING
ALWAYS LIGHT THE PILOT WHETHER FOR THE FIRST TIME OR IF THE GAS SUPPLY HAS RUN OUT, WITH THE GLASS DOOR OPENED OR REMOVED.
PROVIDE ADEQUATE CLEARANCE FOR SERVICING AND OPERATING THE APPLIANCE.
PROVIDE ADEQUATE VENTILATION.
NEVER OBSTRUCT THE FRONT OPENING OF THE APPLIANCE.
OBJECTS PLACED IN FRONT OF THE APPLIANCE MUST BE KEPT A MINIMUM OF 48" FROM THE FRONT FACE OF THE UNIT.
SURFACES AROUND AND ESPECIALLY ABOVE THE APPLIANCE CAN BECOME HOT. AVOID CONTACT WHEN THE APPLIANCE IS OPERATING.
FIRE RISK. EXPLOSION HAZARD.
HIGH PRESSURE WILL DAMAGE VALVE. DISCONNECT GAS SUPPLY PIPING BEFORE PRESSURE TESTING GAS LINE AT TEST PRESSURES ABOVE 1/2 PSIG. CLOSE THE MANUAL SHUT-OFF VALVE BEFORE PRESSURE TESTING GAS LINE AT TEST PRESSURES EQUAL TO OR LESS THAN 1/2 PSIG.
USE ONLY WOLF STEEL APPROVED OPTIONAL ACCESSORIES AND REPLACEMENT PARTS WITH THIS APPLIANCE. USING NON-LISTED ACCESSORIES (BLOWERS, DOORS, LOUVRES, TRIMS, GAS COMPONENTS, VENTING COMPONENTS, ETC.) COULD RESULT IN A SAFETY HAZARD AND WILL VOID THE WARRANTY AND CERTIFICATION.

THIS GAS APPLIANCE SHOULD BE INSTALLED AND SERVICED BY A QUALIFIED INSTALLER to conform with local codes. Installation practices vary from region to region and it is important to know the specifics that apply to your area, for example in Massachusetts State:

- This product must be installed by a licensed plumber or gas fitter when installed within the commonwealth of Massachusetts.
- The appliance damper must be removed or welded in the open position prior to installation of a appliance insert or gas log.
- The appliance off valve must be a "T" handle gas cock.
- The flexible connector must not be longer than 36 inches.
- A Carbon Monoxide detector is required in all rooms containing gas fired appliances.
- The appliance is not approved for installation in a bedroom or bathroom unless the unit is a direct vent sealed combustion product.

The installation must conform with local codes or, in absence of local codes, the National Gas and Propane Installation Code CSA B149.1 in Canada, or the National Fuel Gas Code, ANSI Z223.1 / NFPA 54 in the United States. Suitable for mobile home installation if installed in accordance with the current standard CAN/CSA Z240MH Series, for gas equipped mobile homes, in Canada or ANSI Z223.1 and NFPA 54 in the United States.

NATIONAL FIREPLACE INSTITUTE NFI CERTIFIED www.nficertified.org

We suggest that our gas hearth products be installed and serviced by professionals who are certified in the U.S. by the National Fireplace Institute® (NFI) as NFI Gas Specialists

As long as the required clearance to combustibles is maintained, the most desirable and beneficial location for an appliance is in the center of a building, thereby allowing the most efficient use of the heat created. The location of windows, doors and the traffic flow in the room where the appliance is to be located should be considered. If possible, you should choose a location where the vent will pass through the house without cutting a floor or roof joist.

If the appliance is installed directly on carpeting, vinyl tile or other combustible material other than wood flooring, the appliance shall be installed on a metal or wood panel extending the full width and depth.

Some appliances have optional fans or blowers. If an optional fan or blower is installed, the junction box must be electrically connected and grounded in accordance with local codes, use the current CSA C22.1 Canadian Electrical Code in Canada or the ANSI/NFPA 70 National Electrical code in the United States.

2.3 GENERAL INFORMATION

FOR YOUR SATISFACTION, THIS APPLIANCE HAS BEEN TEST-FIRED TO ASSURE ITS OPERATION AND QUALITY!

RATES AND EFFICIENCIES		
	NATURAL GAS	**PROPANE GAS**
Altitude	0 - 4,500*	0 - 4,500*
Maximum Input	20,000 BTU/hr	16,000 BTU/hr
Maximum Output	13,780 BTU/hr	11,136 BTU/hr
Efficiency	68.9%	69.6%
Minimum Inlet Gas Supply Pressure	4.5” Water Column	11” Water Column
Maximum Inlet Gas Supply Pressure	7” Water Column	13” Water Column
Manifold Pressure Under Flow Conditions	3.5” Water Column	10” Water Column

* When the appliance is installed at elevations above 4,500ft, and in the absence of specific recommendations from the local authority having jurisdiction, the certified high altitude input rating shall be reduced at the rate of 4% for each additional 1,000ft.

This appliance is approved for bathroom, bedroom and bed-sitting room installations and is suitable for mobile home installation. The natural gas model can only be installed in a mobile home that is permanently positioned on its site and fueled with natural gas. This appliance may be installed in an aftermarket permanently located, manufactured (mobile) home, where not prohibited by local codes.

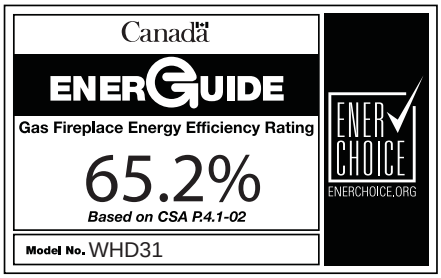

This appliance is only for use with the type of gas indicated on the rating plate. This appliance is not convertible for use with other gases, unless a certified kit is used.

Expansion / contraction noises during heating up and cooling down cycles are normal and are to be expected.

2.4 RATING PLATE INFORMATION

For rating plate location, see “INSTALLATION OVERVIEW” section.

This illustration is for reference only. Refer to the rating plate on the appliance for accurate information.

3.0 VENTING

⚠ WARNING

RISK OF FIRE, MAINTAIN SPECIFIED AIR SPACE CLEARANCES TO VENT PIPE AND APPLIANCE.

IF VENTING IS INCLUDED WITH SPACERS THE VENT SYSTEM MUST BE SUPPORTED EVERY 3 FEET FOR BOTH VERTICAL AND HORIZONTAL RUNS. USE SUPPORTS OR EQUIVALENT NON-COMBUSTIBLE STRAPPING TO MAINTAIN THE REQUIRED CLEARANCE FROM COMBUSTIBLES. USE WOLF STEEL LTD. SUPPORT RING ASSEMBLY W010-0370 OR EQUIVALENT NON-COMBUSTIBLE STRAPPING TO MAINTAIN THE MINIMUM CLEARANCE TO COMBUSTIBLES FOR BOTH VERTICAL AND HORIZONTAL RUNS. SPACERS ARE ATTACHED TO THE INNER PIPE AT PREDETERMINED INTERVALS TO MAINTAIN AN EVEN AIR GAP TO THE OUTER PIPE. THIS GAP IS REQUIRED FOR SAFE OPERATION. A SPACER IS REQUIRED AT THE START, MIDDLE AND END OF EACH ELBOW TO ENSURE THIS GAP IS MAINTAINED. THESE SPACERS MUST NOT BE REMOVED.

THIS APPLIANCE USES A 4” EXHAUST / 7” AIR INTAKE VENT PIPE SYSTEM.
Refer to the section applicable to your installation.

For safe and proper operation of the appliance follow the venting instruction exactly. Deviation from the minimum vertical vent length can create difficulty in burner start-up and/or carboning. Under extreme vent configurations, allow several minutes (5-15) for the flame to stabilize after ignition. Provide a means for visually checking the vent connection to the appliance after the appliance is installed. Use a firestop, vent pipe shield or attic insulation shield when penetrating interior walls, floor or ceiling.
NOTE: If for any reason the vent air intake system is disassembled; reinstall per the instructions provided for the initial installation.

7.1A

When venting straight out the back to the terminal, only the rigid vent can be used. DO NOT USE FLEXIBLE VENT. For all other venting configurations, flexible vent is acceptable.

3.1 VENTING LENGTHS AND COMPONENTS

Use only Wolf Steel, Simpson Dura-Vent, Selkirk Direct Temp, American Metal Amerivent or Metal-Fab venting components. Minimum and maximum vent lengths, for both horizontal and vertical installations, and air terminal locations for either system are set out in this manual and must be adhered to. For Simpson Dura-Vent, Selkirk Direct Temp, American Metal Amerivent and Metal-Fab follow the installation procedure provided with the venting components.

A starter adaptor must be used with the following vent systems and may be purchased from the corresponding supplier:

PART	4”/7”	SUPPLIER	WEBSITE
Duravent	W175-0053	Wolf Steel	www.duravent.com
Amerivent	4DSC-N2	American Metal	www.americanmetalproducts.com
Direct Temp	4DT-AAN	Selkirk	www.selkirkcorp.com
SuperSeal	4DNA	Metal-Fab	www.mtlfab.com

For Simpson Dura-Vent, Selkirk Direct Temp, American Metal Amerivent and Metal-Fab follow the installation procedure found on the website for your venting supplier.

For vent systems that provide seals on the inner exhaust flue, only the outer air intake joints must be sealed using a red high temperature silicone (RTV). This same sealant may be used on both the inner exhaust and outer intake vent pipe joints of all other approved vent systems except for the exhaust vent pipe connection to the appliance flue collar which must be sealed using the black high temperature sealant Mill Pac. High temperature sealant must be ordered separately.

When using Wolf Steel venting components, use only approved Wolf Steel rigid / flexible components with the following termination kits: wall terminal kit **GD222**, **GD222R**, or 1/12 to 7/12 pitch roof terminal kit **GD110**, 8/12 to 12/12 roof terminal kit **GD111**, flat roof terminal kit **GD112** or periscope kit **GD201** (for wall penetration below grade). With flexible venting, in conjunction with the various terminations, use either the 5 foot vent kit **GD220** or the 10 foot vent kit **GD330**.

For optimum flame appearance and appliance performance, keep the vent length and number of elbows to a minimum. The air terminal must remain unobstructed at all times. Examine the air terminal at least once a year to verify that it is unobstructed and undamaged.
Rigid and flexible venting systems must not be combined. Different venting manufacturer components must not be combined.

These vent kits allow for either horizontal or vertical venting of the appliance. The maximum allowable horizontal run is 20 feet. The maximum allowable vertical vent length is 40 feet. The maximum number of vent connections is two horizontally or three vertically (excluding the appliance and the air terminal connections) when using flexible venting.

8.1

3.2 TYPICAL VENT INSTALLATION

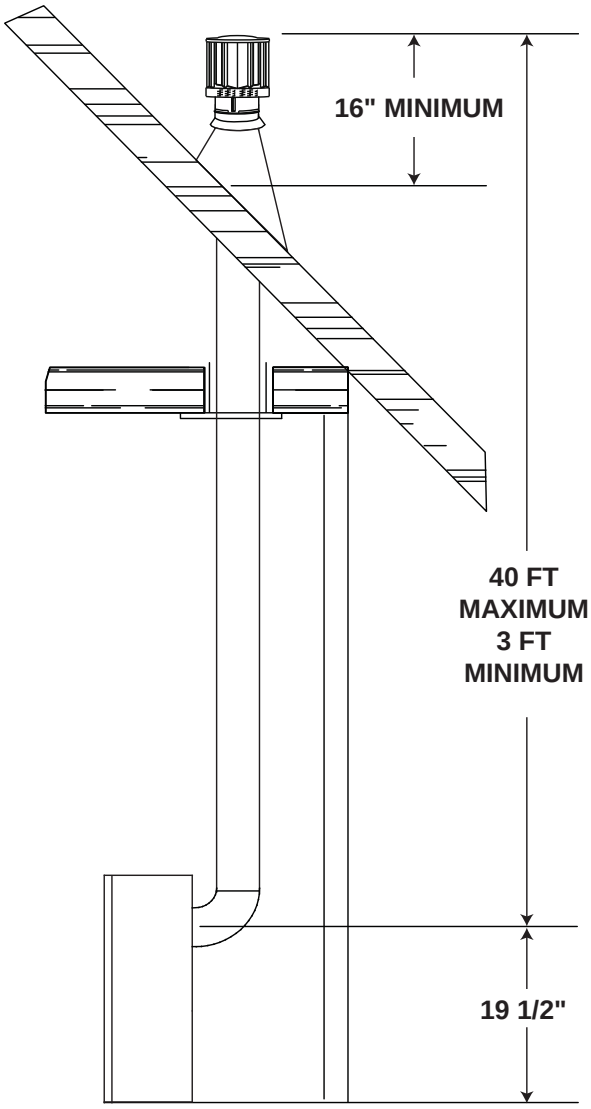

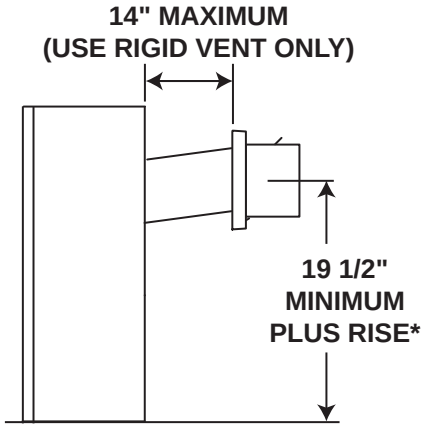

Appliance shown without surround.

* See "VENTING" section

3.3 SPECIAL VENT INSTALLATIONS

3.3.1 PERISCOPE TERMINATION

Use the periscope kit to locate the air termination above grade. The periscope must be installed so that when final grading is completed, the bottom air slot is located a minimum 12” above grade. The maximum allowable vent length is 10’.

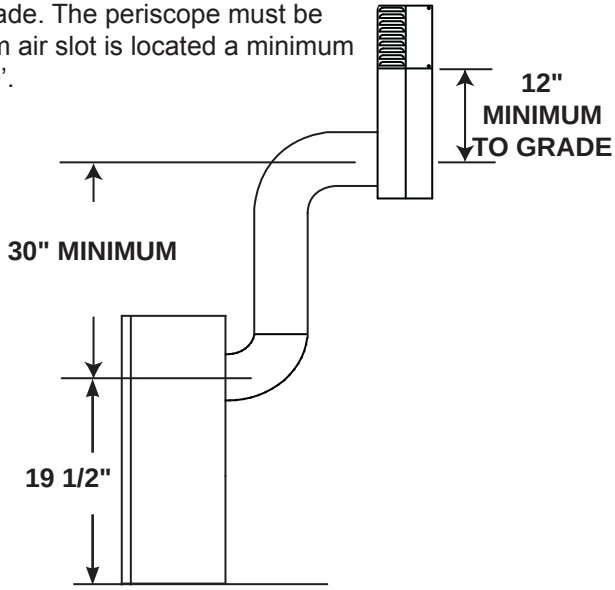

9.6

3.4 VENT TERMINAL CLEARANCES

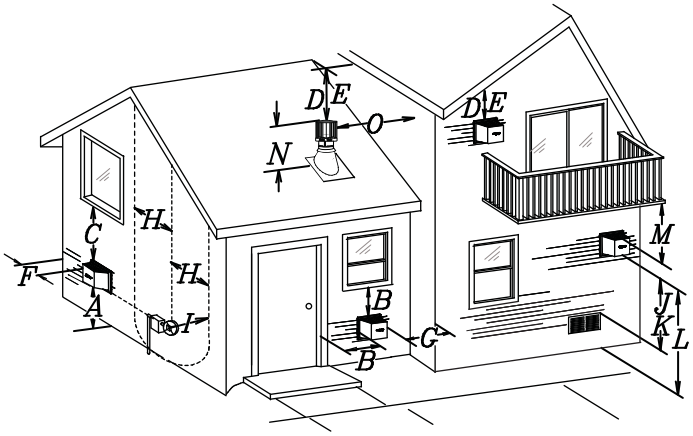

COVERED BALCONY APPLICATIONS ††*

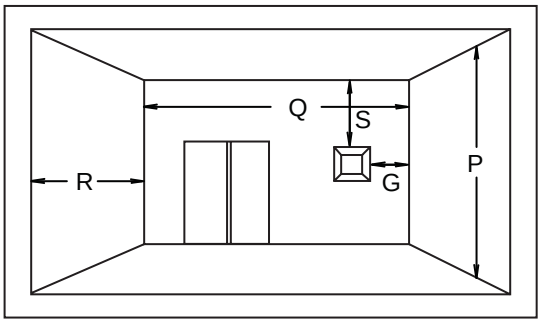

Q_{MIN}	= 3 feet
R_{MAX}	= 2 x Q_{ACTUAL}
R_{MAX}	≤ 15 feet

	INSTALLATIONS		
	CANADA	U.S.A.	
A	12”	12”	Clearance above grade, veranda porch, deck or balcony.
B	12” Δ	9” Δ	Clearance to windows or doors that open.
C	12” *	12” *	Clearance to permanently closed windows.
D	18” **	18” **	Vertical clearance to ventilated soffits located above the terminal within a horizontal distance of 2’ from the center line of the terminal.
E	12” **	12” **	Clearance to unventilated soffit.
F	0”	0”	Clearance to an outside corner wall.
G	0” ***	0” ***	Clearance to an inside **non**-combustible corner wall or protruding **non**-combustible obstructions (chimney, etc.).
	2” ***	2” ***	Clearance to an inside combustible corner wall or protruding combustible obstructions (vent chase, etc.).
H	3’	3’ ****	Clearance to each side of the center line extended above the meter / regulator assembly to a maximum vertical distance of 15’.
I	3’	3’ ****	Clearance to a service regulator vent outlet.
J	12”	9”	Clearance to a non-mechanical air supply inlet to the building or a combustion air inlet to any other appliance.
K	6’	3’ †	Clearance to a mechanical air supply inlet.
L	7’ ‡	7’ ****	Clearance above a paved sidewalk or paved driveway located on public property.
M	12” ††	12” ****	Clearance under a veranda, porch or deck.
N	16”	16”	Clearance above the roof.
O	2’ †*	2’ †*	Clearance from an adjacent wall including neighbouring buildings.
P	8’	8’	Roof must be **non**-combustible without openings.
Q	3’	3’	See chart for wider wall dimensions.
R	6’	6’	See chart for deeper wall dimensions. The terminal shall not be installed on any wall that has an opening between the terminal and the open side of the structure.
S	12”	12”	Clearance under a covered balcony

Δ The terminal shall not be located less than 6 feet under a window that opens on a horizontal plane in a structure with three walls and a roof.

* Recommended to prevent condensation on windows and thermal breakage

** It is recommended to use a heat shield and to maximize the distance to vinyl clad soffits.

*** The periscope requires a minimum 18 inches clearance from an inside corner.

**** This is a recommended distance. For additional requirements check local codes.

† 3 feet above if within 10 feet horizontally.

‡ A vent shall not terminate where it may cause hazardous frost or ice accumulations on adjacent property surfaces.

†† Permitted only if the veranda, porch, or deck is fully open on a minimum of two sides beneath the floor.

†* Recommended to prevent recirculation of exhaust products. For additional requirements check local codes.

††* Permitted only if the balcony is fully open on a minimum of one side.

NOTE: **Clearances are in accordance with local installation codes and the requirements of the gas supplier.**

Obadiah's · 406-300-1776

3.5 VENTING APPLICATION FLOW CHART

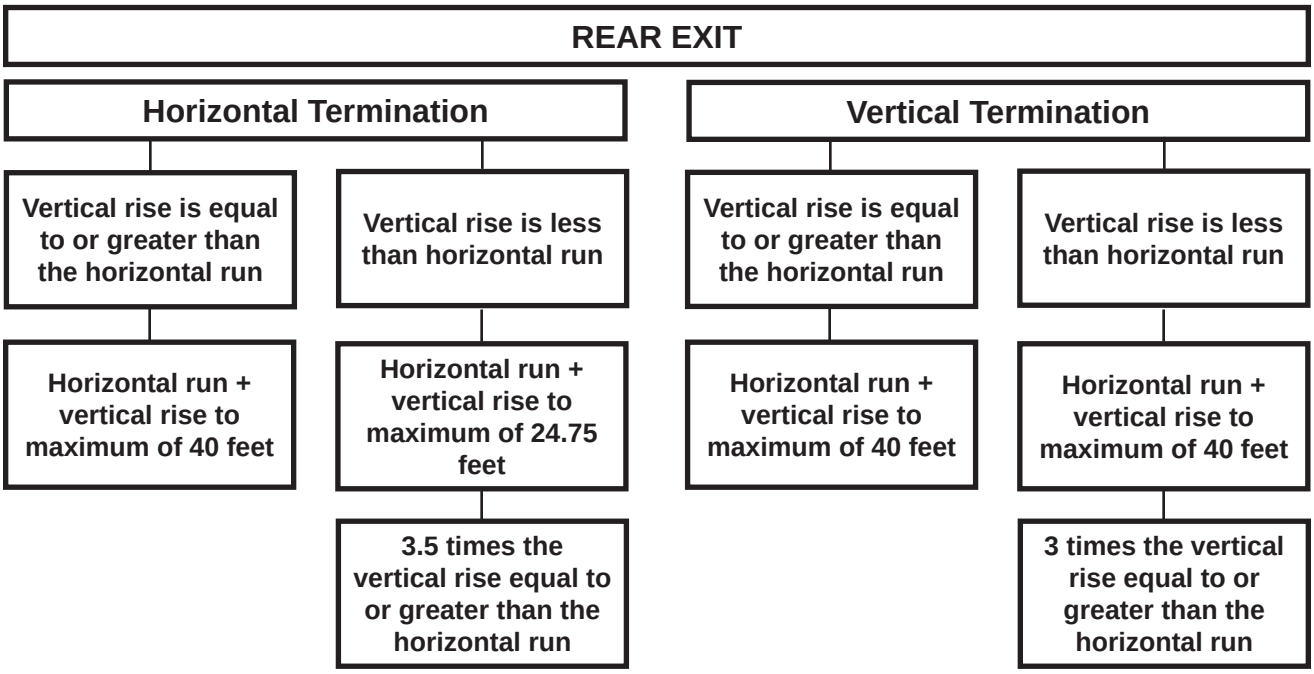

13.2

3.6 DEFINITIONS

For the following symbols used in the venting calculations and examples are:
> - greater than
≥ - equal to or greater than
< - less than
≤ - equal to or less than
H_T - total of both horizontal vent lengths (Hr) and offsets (Ho) in feet
H_R - combined horizontal vent lengths in feet
H_O - offset factor: .03 (total degrees of offset - 90°*) in feet
V_T - combined vertical vent lengths in feet

14.1

3.7 ELBOW VENT LENGTH VALUES

	FEET	INCHES
1°	0.03	0.5
15°	0.45	6.0
30°	0.9	11.0
45°	1.35	16.0
90°*	2.7	32.0

* The first 90° offset has a zero value and is shown in the formula as - 90°

15.1

3.8 HORIZONTAL TERMINATION

$(H_T) \leq (V_T)$

Simple venting configuration (only two 90° elbows)

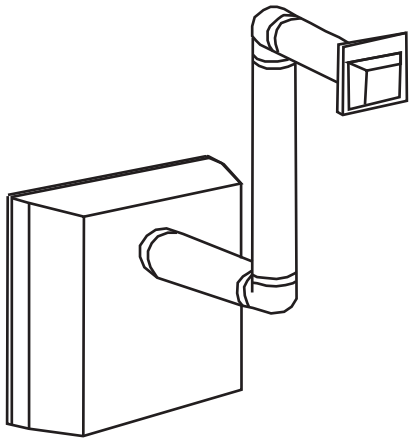

See graph to determine the required vertical rise $\mathbf{V_T}$ for the required horizontal run $\mathbf{H_T}$.

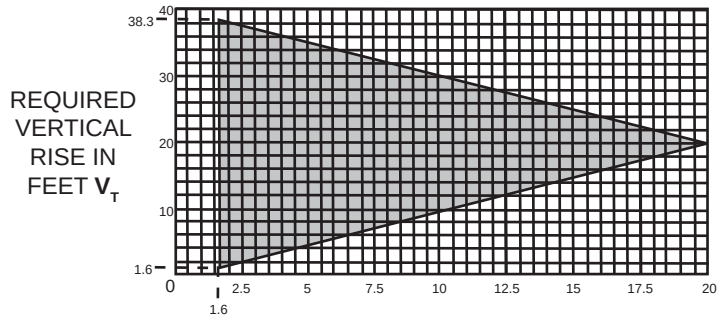

The shaded area within the lines represents acceptable values for $\mathbf{H_T}$ and $\mathbf{H_T}$

For vent configurations requiring more than two 90° elbows, the following formulas apply:

Formula 1: $\mathbf{H_T \leq V_T}$
Formula 2: $\mathbf{H_T + V_T \leq 40}$ **feet**

Example:
$\mathbf{V_1}$ = 9 FT
$\mathbf{V_2}$ = 6 FT
$\mathbf{V_T = V_1 + V_2}$ = 9 + 6 = 15 FT
$\mathbf{H_1}$ = 3 FT
$\mathbf{H_2}$ = 2 FT
$\mathbf{H_3}$ = 1.5 FT
$\mathbf{H_R = H_1 + H_2 + H_3}$ = 3 + 2 + 1.5 = 6.5 FT
$\mathbf{H_O}$ = .03 (four 90° elbows - 90°) = .03 (360° - 90°) = 8.1 FT
$\mathbf{H_T = H_R + H_O}$ = 6.5 + 8.1 = 14.6 FT
$\mathbf{H_T + V_T}$ = 14.6 + 15 = 29.6 FT

Formula 1: $\mathbf{H_T \leq V_T}$
$14.6 \leq 15$
Formula 2: $\mathbf{H_T + V_T \leq 40}$ **FT**
$29.6 \leq 40$
Since both formulas are met, this vent configuration is acceptable.

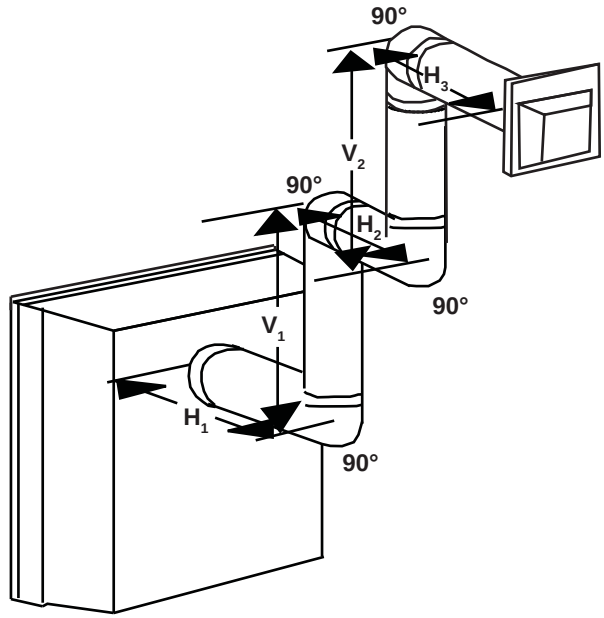

16.3

$(H_T) > (V_T)$

Simple venting configuration (only two 90° elbows)

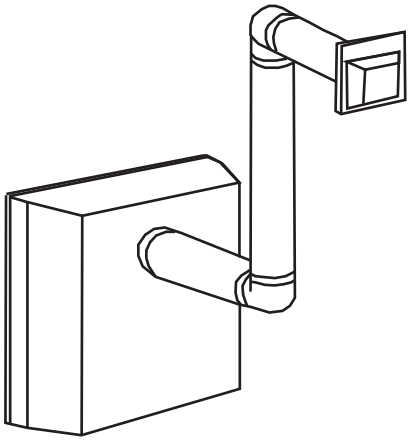

See graph to determine the required vertical rise $\mathbf{V_T}$ for the required horizontal run $\mathbf{H_T}$.

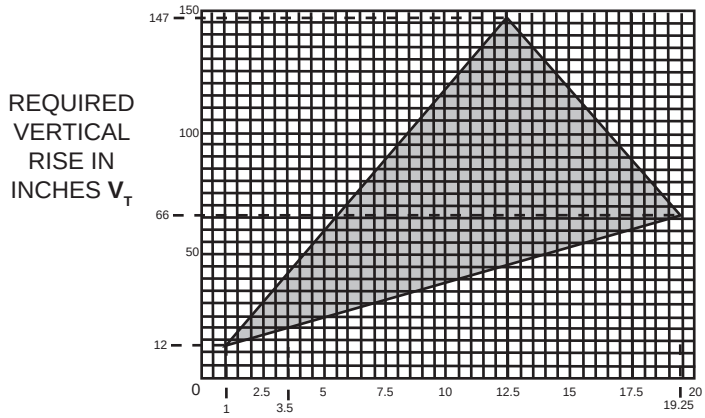

The shaded area within the lines represents acceptable values for $\mathbf{H_T}$ and $\mathbf{H_T}$

For vent configurations requiring more than two 90° elbows, the following formulas apply:

Formula 1: $H_T \leq 3.5V_T$
Formula 2: $H_T + V_T \leq 24.75$ feet

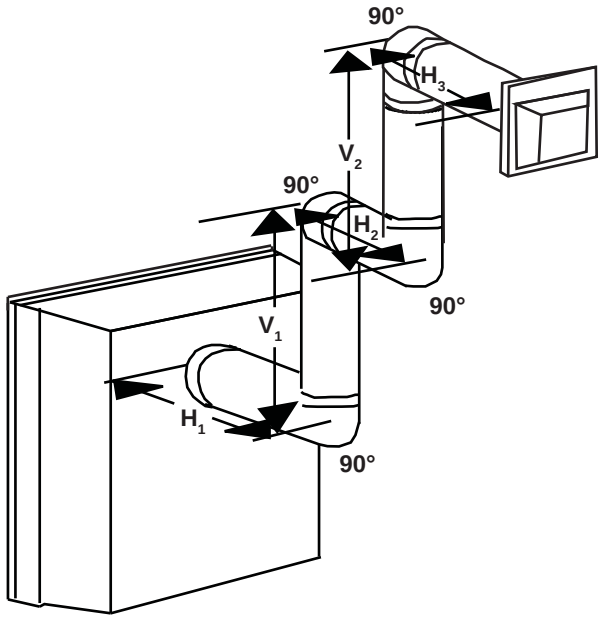

Example:
$\mathbf{V_1}$ = 4 FT
$\mathbf{V_2}$ = 1.5 FT
$\mathbf{V_T} = \mathbf{V_1} + \mathbf{V_2}$ = 4 + 1.5 = 5.5 FT
$\mathbf{H_1}$ = 2 FT
$\mathbf{H_2}$ = 1 FT
$\mathbf{H_3}$ = 1 FT
$\mathbf{H_4}$ = 1.5 FT
$\mathbf{H_R} = \mathbf{H_1} + \mathbf{H_2} + \mathbf{H_3} + \mathbf{H_4}$ = 2 + 1 + 1 + 1.5 = 5.5 FT
$\mathbf{H_O}$ = .03 (four 90° elbows + one 45° elbow - 90°)
= .03 (90 + 90 + 90 + 90 + 45 - 90) = 9.45 FT
$\mathbf{H_T} = \mathbf{H_R} + \mathbf{H_O}$ = 5.5 + 9.45 = 14.95 FT
$\mathbf{H_T} + \mathbf{V_T}$ = 14.95 + 5.5 = 20.45 FT

Formula 1: $\mathbf{H_T \leq 3.5V_T}$
$\mathbf{3.5V_T}$ = 3.5 x 5.5 = 19.25 FT
14.95 ≤ 19.25
Formula 2: $\mathbf{H_T + V_T \leq 24.75}$ **FT**
20.45 ≤ 24.75

Since both formulas are met, this vent configuration is acceptable.

16.3_2A

3.9 VERTICAL TERMINATION

$(H_T) \leq (V_T)$

Simple venting configurations.

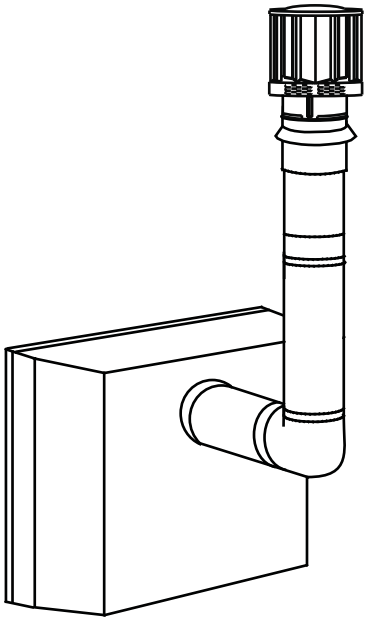

See graph to determine the required vertical rise $\mathbf{V_T}$ for the required horizontal run $\mathbf{H_T}$.

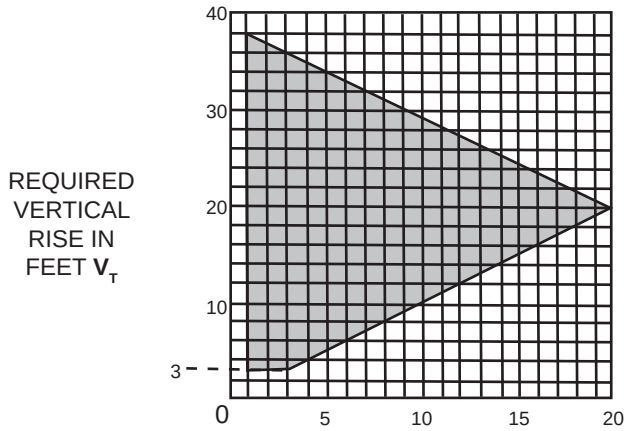

The shaded area within the lines represents acceptable values for $\mathbf{H_T}$ and $\mathbf{V_T}$

For vent configurations requiring more than one 90° elbow, the following formulas apply:

Formula 1: $H_T \leq V_T$
Formula 2: $H_T + V_T \leq 40$ feet

Example:
V_1 = 5 FT
V_2 = 10 FT
$V_T = V_1 + V_2$ = 5 + 10 = 15 FT
H_1 = 3 FT
H_2 = 2.5 FT
$H_R = H_1 + H_2$ = 3 + 2.5 = 5.5 FT
H_O = .03 (three 90° elbows - 90°)
= .03 (270° - 90°) = 5.4 FT
$H_T = H_R + H_O$ = 5.5 + 5.4 = 10.9 FT
$H_T + V_T$ = 10.9 + 15 = 25.9 FT

Formula 1: $H_T \leq V_T$
$10.9 \leq 15$
Formula 2: $H_T + V_T \leq$ **40 FT**
$25.9 \leq 40$
Since both formulas are met, this vent configuration is acceptable.

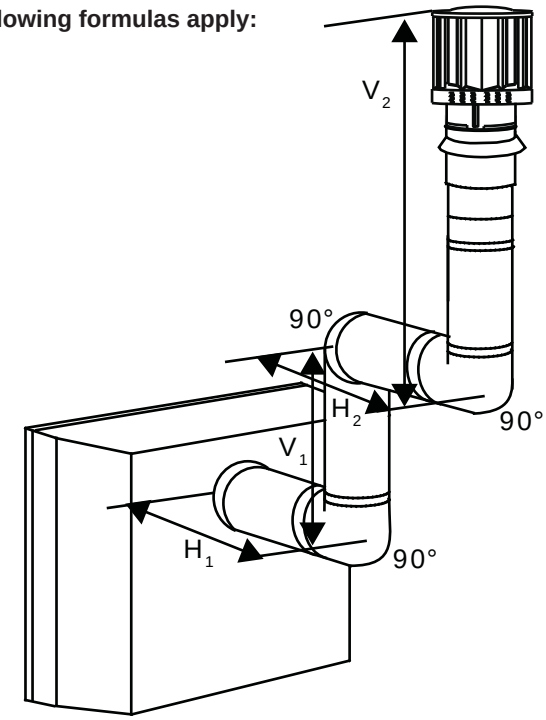

18.6

$(H_T) > (V_T)$

Simple venting configurations.

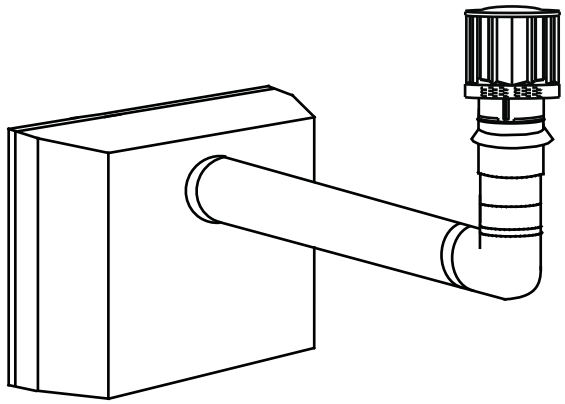

See graph to determine the required vertical rise $\mathbf{V_T}$ for the required horizontal run $\mathbf{H_T}$.

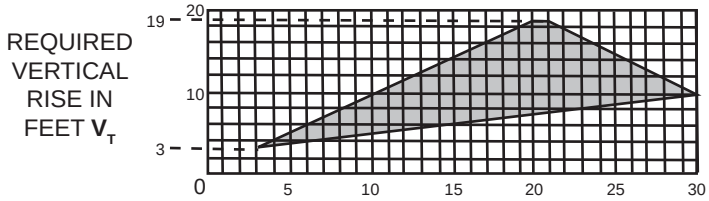

The shaded area within the lines represents acceptable values for $\mathbf{H_T}$ and $\mathbf{v_T}$

For vent configurations requiring more than one 90° elbow, the following formulas apply:

Formula 1: $H_T \leq 3\ V_T$
Formula 2: $H_T + V_T \leq 40$ **FT**

Example:
V_1 = 1.5 FT
V_2 = 5 FT
$V_T = V_1 + V_2$ = 1.5 + 5 = 6.5 FT
H_1 = 1 FT
H_2 = 1 FT
H_3 = 10.75 FT
$H_R = H_1 + H_2 + H_3$ = 1 + 1 + 10.75 = 12.75 FT
H_O = .03 (three 90° elbows + one 45° elbow - 90°)
= .03 (270° + 45° - 90°) = 6.75 FT
$H_T = H_R + H_O$ = 12.75 + 6.75 = 19.5 FT
$H_T + V_T$ = 19.5 + 6.5 = 26 FT

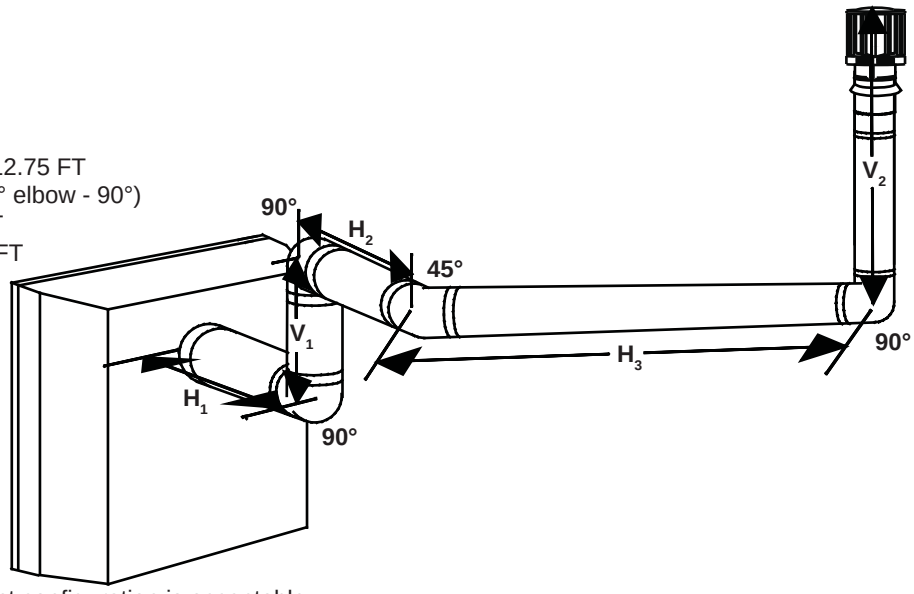

Formula 1:
$H_T \leq 3\ V_T$
$3\ V_T$ = 3 x 6.5 = 19.5 FT
19.5 = 19.5

Formula 2:
$H_T + V_T \leq 40$ **FT**
26 ≤ 40

Since both formulas are met, this vent configuration is acceptable.

18.7

4.0 INSTALLATION

⚠ WARNING

FOR SAFE AND PROPER OPERATION OF THE APPLIANCE, FOLLOW THE VENTING INSTRUCTIONS EXACTLY.

ALL INNER EXHAUST AND OUTER INTAKE VENT PIPE JOINTS MAY BE SEALED USING EITHER RED RTV HIGH TEMP SILICONE SEALANT W573-0002 (NOT SUPPLIED) OR BLACK HIGH TEMP MILL PAC W573-0007 (NOT SUPPLIED) WITH THE EXCEPTION OF THE APPLIANCE EXHAUST FLUE COLLAR WHICH MUST BE SEALED USING MILL PAC.

IF USING PIPE CLAMPS TO CONNECT VENT COMPONENTS, 3 SCREWS MUST ALSO BE USED TO ENSURE THE CONNECTION CANNOT SLIP OFF.

DO NOT CLAMP THE FLEXIBLE VENT PIPE.

RISK OF FIRE, EXPLOSION OR ASPHYXIATION. IMPROPER SUPPORT OF THE ENTIRE VENTING SYSTEM MAY ALLOW VENT TO SAG AND SEPARATE. USE VENT RUN SUPPORTS AND CONNECT VENT SECTIONS PER INSTALLATION INSTRUCTIONS.

RISK OF FIRE, DO NOT ALLOW LOOSE MATERIALS OR INSULATION TO TOUCH THE VENT PIPE. REMOVE INSULATION TO ALLOW FOR THE INSTALLATION OF THE ATTIC SHIELD AND TO MAINTAIN CLEARANCES TO COMBUSTIBLES.

68.2A

4.1 WALL AND CEILING PROTECTION

⚠ WARNING

DO NOT FILL THE SPACE BETWEEN THE VENT PIPE AND ENCLOSURE WITH ANY TYPE OF MATERIAL. DO NOT PACK INSULATION OR COMBUSTIBLES BETWEEN CEILING FIRESTOPS. ALWAYS MAINTAIN SPECIFIED CLEARANCES AROUND VENTING AND FIRESTOP SYSTEMS. INSTALL WALL SHIELDS AND FIRESTOPS AS SPECIFIED. FAILURE TO KEEP INSULATION OR OTHER MATERIALS AWAY FROM VENT PIPE MAY CAUSE FIRE.

70.1

4.2 HORIZONTAL INSTALLATION

A. Level and affix the mounting template to the wall at the desired location and height. The centre of the vent pipe must be located between wall studs.

B. Using the template, mark the holes for the vent, gas and electrical outlets, and mounting screws. See “MINIMUM CLEARANCES TO COMBUSTIBLES” section. **Note: There are two sets of four mounting screws, choose the appropriate set for either 16” or 24” studs.**

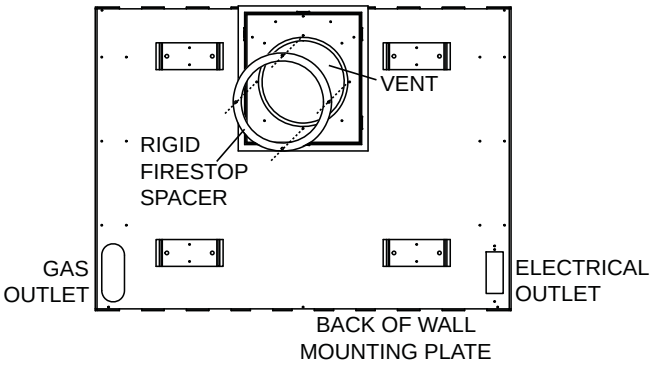

C. Remove the mounting template from the wall and cut the holes as marked.

D. Remove the 4 screws that secure the wall mounting plate to the appliance.

E. If flexible venting is to be used, remove the rigid firestop spacer.

F. The shield and deflector have been designed to accommodate a maximum wall depth of 12”. Determine the depth of the wall and cut the shield and deflector accordingly. The shield must extend the full depth of the combustible wall.

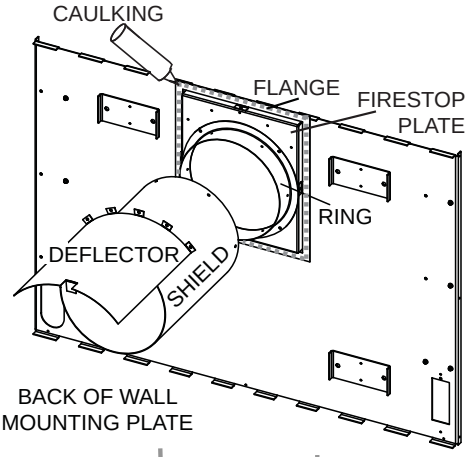

G. Screw the shield together using the screws provided.

H. Secure the ring to the firestop plate on the back of the mounting plate using the 4 screws provided.

I. Bend the 6 tabs on the deflector as shown.

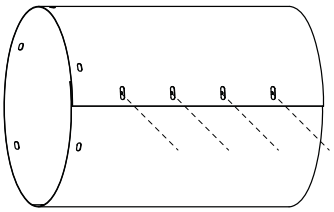

J. Slide the shield onto the ring and align the holes. Using 6 of the screws provided, secure the shield to the ring.

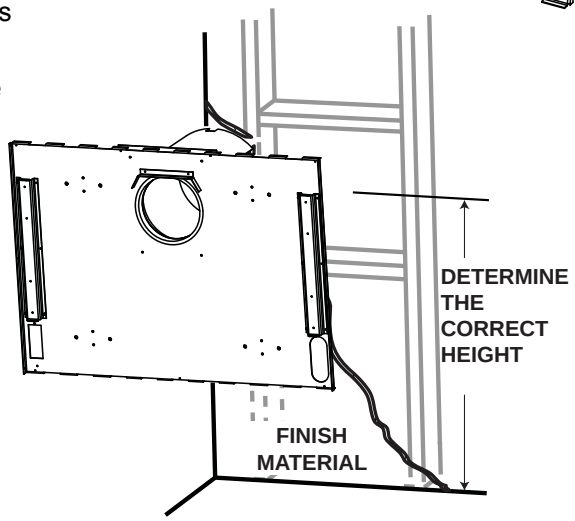

K. Attach the deflector above the shield assembly using 5 of the screws provided.

L. Apply a bead of caulking (not supplied) to the flange. Insert the shield assembly into the wall, level the mounting plate and secure it using 4 fasteners.

4.3 USING FLEXIBLE VENT COMPONENTS

⚠ WARNING

DO NOT ALLOW THE INNER FLEX PIPE TO BUNCH UP ON HORIZONTAL OR VERTICAL RUNS AND ELBOWS. KEEP IT PULLED TIGHT.

SPACERS ARE ATTACHED TO THE INNER FLEX PIPE AT PREDETERMINED INTERVALS TO MAINTAIN AN EVEN AIR GAP TO THE OUTER FLEX PIPE. THIS GAP IS REQUIRED FOR SAFE OPERATION. A SPACER IS REQUIRED AT THE START, MIDDLE AND END OF EACH ELBOW TO ENSURE THIS GAP IS MAINTAINED. THESE SPACERS MUST NOT BE REMOVED.

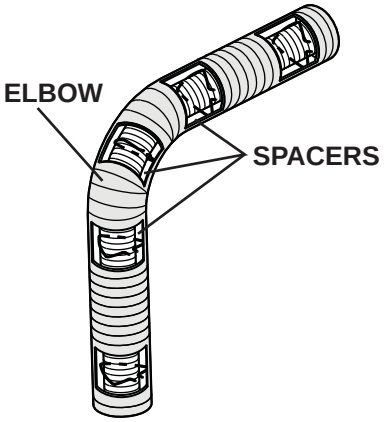

For safe and proper operation of the appliance, follow the venting instructions exactly.
All inner flex pipe and outer flex pipe joints may be sealed using high temperature sealant W573-0002 (not supplied) or the high temperature sealant W573-0007 Mill Pac (not supplied). However, the high temperature sealant W573-0007 Mill Pac (not supplied) must be used on the joint connecting the inner flex pipe and the exhaust flue collar.
Use only approved flexible vent pipe kits marked:

"Wolf Steel Approved Venting" as identified by the stamp only on the outer flex pipe.

22.1

4.3.1 APPLIANCE VENT CONNECTION

A. Install the inner flex pipe to the fireplace. Secure with 3 screws and flat washers. Seal the joint and screw holes using the high temperature sealant W573-0007 (not supplied).

B. Install the outer flex pipe to the fireplace. Attach and seal the joints using the high temperature sealant W573-0002 (not supplied).

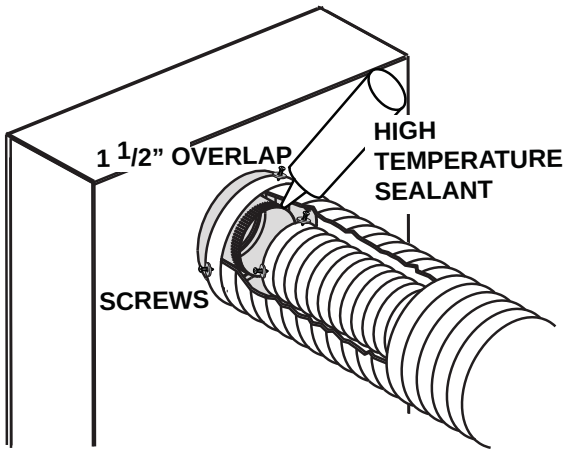

28.4

4.3.2 HORIZONTAL AIR TERMINAL INSTALLATION

A. Stretch the inner flex pipe to the required length taking into account the additional length needed for the finished wall surface. Slip the vent pipe a minimum of 2” over the inner sleeve of the air terminal and secure with 3 #8 screws. Apply a heavy bead of the high temperature sealant W573-0007 Mill Pac (not supplied).

B. Using the outer flex pipe, slide over the outer combustion air sleeve of the air terminal and secure with 3 #8 screws. Seal using high temperature sealant W573-0002 (not supplied).

C. Holding the air terminal (lettering in an upright, readable position), secure to the exterior wall and make weather tight by sealing with caulking (not supplied).

D. If more vent pipe needs to be used to reach the fireplace, couple them together as illustrated. The vent system must be supported approximately every 3 feet for both vertical and horizontal runs. Use noncombustible strapping to maintain the minimum clearance to combustibles.

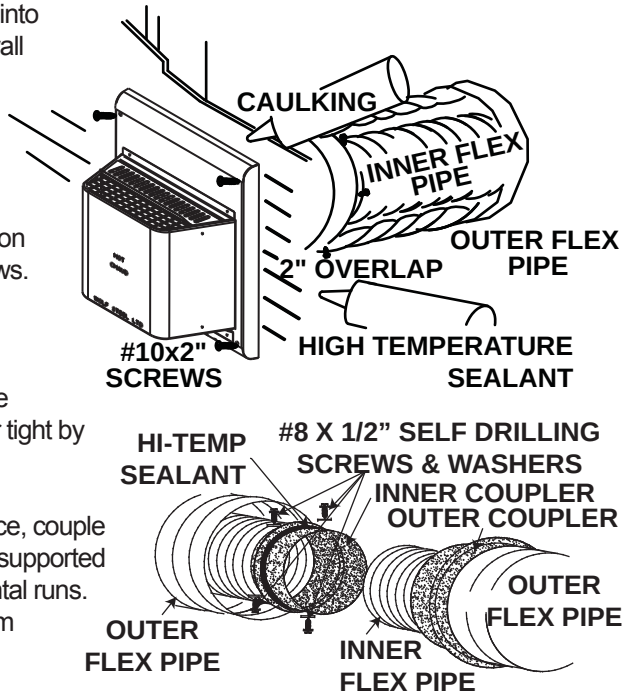

The air terminal mounting plate may be recessed into the exterior wall or siding no greater than the depth of its return flange.

23.9

4.3.3 VERTICAL INSTALLATION

This application occurs when venting through a roof. Installation kits for various roof pitches are available from your authorized dealer / distributor. See accessories to order specific kits required.

A. Determine the air terminal location, cut and frame a square opening as illustrated in the ceiling and the roof to provide the minimum 1“ clearance between the vent pipe and any combustible material. Try to center the vent pipe location midway between two joists to prevent having to cut them. Use a plumb bob to line up the center of the openings. A vent pipe shield will prevent any materials such as insulation, from filling up the 1” air space around the pipe. Nail headers between the joist for extra support.

B. Apply a bead of caulking (not supplied) to the framework or to the Wolf Steel vent pipe shield plate or equivalent (in the case of a finished ceiling), and secure over the opening in the ceiling. A firestop must be placed on the bottom of each framed opening in a roof or ceiling that the venting system passes through. Apply a bead of caulking all around and place a firestop spacer over the vent shield to restrict cold air from being drawn into the room or around the fireplace. Ensure that both spacer and shield maintain the required clearance to combustibles. Once the vent pipe is installed in its final position, apply sealant between the pipe and the firestop assembly.

C. In the attic, slide the vent pipe collar down to cover up the open end of the shield and tighten. This will prevent any materials, such as insulation, from filling up the 1” air space around the pipe.

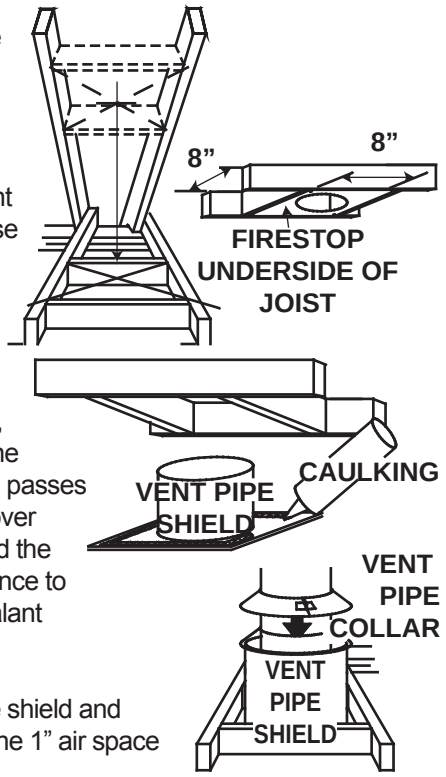

21.1

4.3.4 VERTICAL AIR TERMINAL INSTALLATION (FLEXIBLE)

⚠ WARNING

MAINTAIN A MINIMUM 2” SPACE BETWEEN THE AIR INLET BASE AND THE STORM COLLAR.

A. Fasten the roof support to the roof using the screws provided. The roof support is optional. In this case the venting is to be adequately supported using either an alternate method suitable to the authority having jurisdiction or the optional roof support.

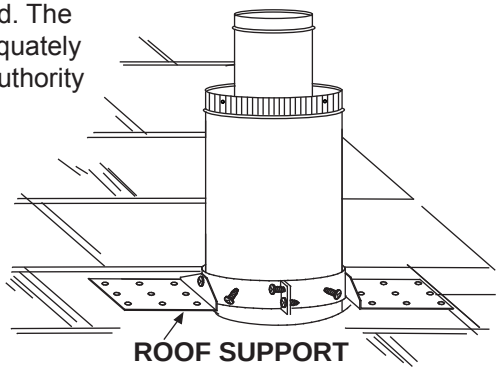

B. Stretch the inner flex pipe to the required length. Slip the inner flex pipe a minimum of 2” over the inner pipe of the air terminal connector and secure with 3 #8 screws. Seal using a heavy bead of high temperature sealant W573-0007 (not supplied).

C. Repeat using the outer flex pipe, using a heavy bead of high temperature sealant W573-0002 (not supplied).

D. Thread the air terminal connector / vent pipe assembly down through the roof. The air terminal must be positioned vertically and plumb. Attach the air terminal connector to the roof support, ensuring that the top of the air terminal is 16” above the highest point that it penetrates the roof.

E. Remove nails from the shingles, above and to the sides of the air terminal connector. Place the flashing over the air terminal connector leaving a min. 3/4” of the air terminal connector showing above the top of the flashing. Slide the flashing underneath the sides and upper edge of the shingles. Ensure that the air terminal connector is properly centred within the flashing, giving a 3/4” margin all around. Fasten to the roof. Do not nail through the lower portion of the flashing. Make weather-tight by sealing with caulking. Where possible, cover the sides and top edges of the flashing with roofing material.

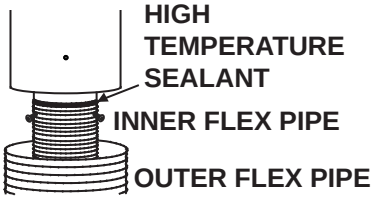

F. Aligning the seams of the terminal and air terminal connector, place the terminal over the air terminal connector making sure the vent pipe goes into the hole in the terminal. Secure with the three screws provided.

G. Apply a heavy bead of weatherproof caulking 2” above the flashing. Install the storm collar around the air terminal and slide down to the caulking. Tighten to ensure that a weather-tight seal between the air terminal and the collar is achieved.

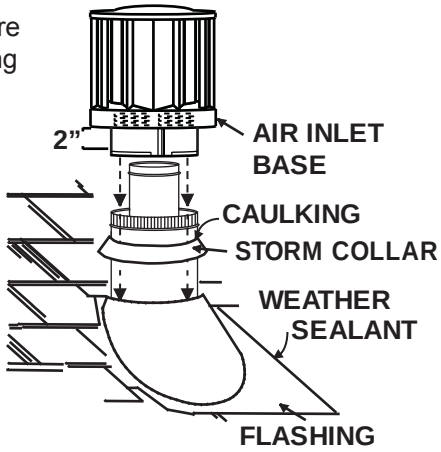

H. If more vent pipe needs to be used to reach the appliance see “HORIZONTAL AIR TERMINAL INSTALLATION” section.

24.1

4.4 USING RIGID VENT COMPONENTS

The vent system must be supported approximately every 3 feet for both vertical and horizontal runs. Use Wolf Steel Ltd. support ring assembly or equivalent noncombustible strapping to maintain the minimum clearance to combustibles for both vertical and horizontal runs.

All inner exhaust and outer intake vent pipe joints may be sealed using either red high temperature silicone sealant W573-0002 (not supplied) or black high temperature sealant W573-0007 Mill Pac (not supplied) with the exception of the appliance exhaust flue collar which must be sealed using Mill Pac.

25.1

4.4.1 HORIZONTAL AIR TERMINAL INSTALLATION

⚠ WARNING

RISK OF FIRE, DO NOT ALLOW LOOSE MATERIALS OR INSULATION TO TOUCH THE VENT PIPE. REMOVE INSULATION TO ALLOW FOR THE INSTALLATION OF THE ATTIC SHIELD AND TO MAINTAIN CLEARANCES TO COMBUSTIBLES.

A. Move the appliance into position. Measure the vent length required between terminal and appliance taking into account the additional length needed for the finished wall surface and any 1¼” overlaps between venting components.

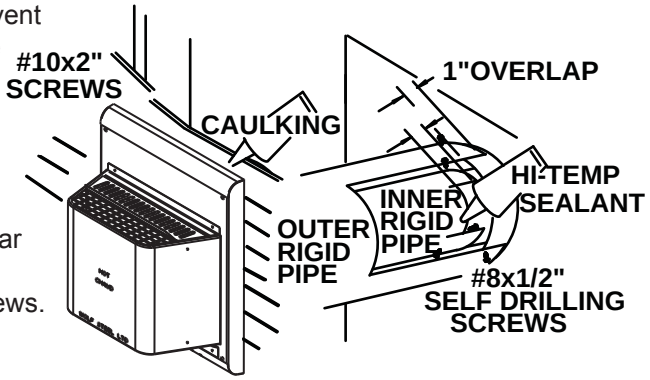

B. Apply high temperature sealant W573-0007 (not supplied) to the outer edge of the inner collar of the appliance. Attach the first inner rigid pipe component and secure using 3 self tapping screws. Repeat using the outer rigid pipe.

C. Holding the air terminal (lettering in an upright, readable position), secure to the exterior wall and make weather tight by sealing with caulking (not supplied).

The air terminal mounting plate may be recessed into the exterior wall or siding no greater than the depth of the return flange.

26.4

4.4.2 EXTENDED HORIZONTAL AND CORNER TERMINAL INSTALLATION

A 45° corner installation must have a rise between the appliance combustion air collar and the air terminal. In this case a minimum vertical rise of 24” is required.

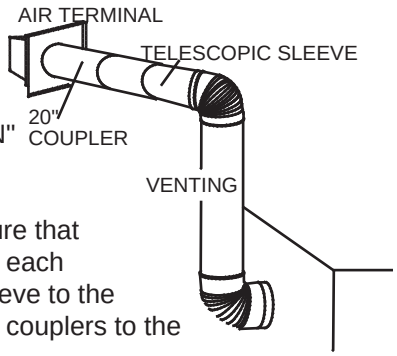

A. Follow the instructions for "HORIZONTAL AIR TERMINAL INSTALLATION" section.

B. Continue adding components alternating inner and outer vent pipes. Ensure that all inner vent pipes and elbows have sufficient vent spacers attached and each component is securely fastened to the one prior. Attach the telescopic sleeve to the vent run. Seal and secure. To facilitate completion, attach inner and outer couplers to the air terminal.

C. Install the air terminal. See “HORIZONTAL AIR TERMINAL INSTALLATION” section. Extend the outer telescopic sleeve; connect to the air terminal assembly. Seal and fasten with self tapping screws.

48.4

4.4.3 VERTICAL AIR TERMINAL INSTALLATION (RIGID)

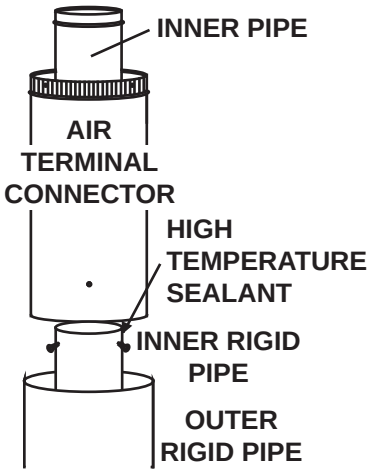

A. Move the appliance into position.

B. Fasten the roof support to the roof using the screws provided. The roof support is optional. In this case the venting is to be adequately supported using either an alternate method suitable to the authority having jurisdiction or the optional roof support.

C. Apply high temperature sealant W573-0007 (not supplied) to the outer edge of the inner sleeve of the air terminal. Slip the inner coupler a minimum of 2” over the sleeve and secure using 3 screws.

D. Apply high temperature sealant W573-0002 (not supplied) to the outer edge of the of the outside sleeve of the air terminal connector. Slip the outer coupler over the sleeve and secure as before. Trim the outer coupler even with the inner coupler end.

E. Thread the air terminal connector / vent pipe assembly down through the roof support and attach, ensuring that a minimum 16” of air terminal connector will penetrate the roof when fastened. If the attic space is tight, we recommend threading the Wolf Steel vent pipe collar or equivalent loosely onto the air terminal connector / vent pipe assembly as it is passed through the attic. The air terminal connector must be located vertically and plumb.

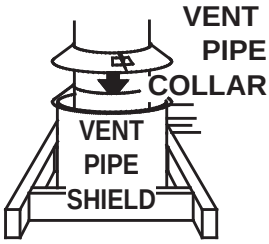

F. Remove nails from the shingles, above and to the sides of the air terminal connector. Place the flashing over the air terminal connector and slide it underneath the sides and upper edge of the shingles. Ensure that the air terminal connector is properly centered within the flashing, giving a 3/4” margin all around. Fasten to the roof. Do NOT nail through the lower portion of the flashing. Make weather-tight by sealing with caulking. Where possible, cover the sides and top edges of the flashing with roofing material.

G. Apply a heavy bead of waterproof caulking 2” above the flashing. Install the storm collar around the air terminal and slide down to the caulking. Tighten to ensure that a weather tight seal between the air terminal connector and the collar is achieved.

H. Continue adding rigid venting sections, sealing and securing as above. Attach the inner collapsed telescopic sleeve to the last section of rigid piping. Secure with screws and seal. Repeat using the outer telescopic sleeve.

I. Attach horizontal venting to the back of the appliance, see “HORIZONTAL AIR TERMINAL INSTALLATION” section. Attach an inner and outer 90º elbow to this venting, secure and seal as outlined obove.

J. Run a bead of high temperature sealant W573-0007 (not supplied) around the outside of the inner elbow on the venting. Pull the telescopic sleeve a minimum of 2” onto the elbow. Secure with 3 screws. Repeat with the outer telescopic sleeve.

K. In the attic, slide the vent pipe collar down to cover up the open end of the shield and tighten. This will prevent any materials, such as insulation, from filling up the 1” air space around the pipe.

27.3

4.5 MOUNTING THE APPLIANCE

A. Guide the vent pipe through the shield on the mounting plate and secure the appliance to the mounting as illustrated using 8 screws.

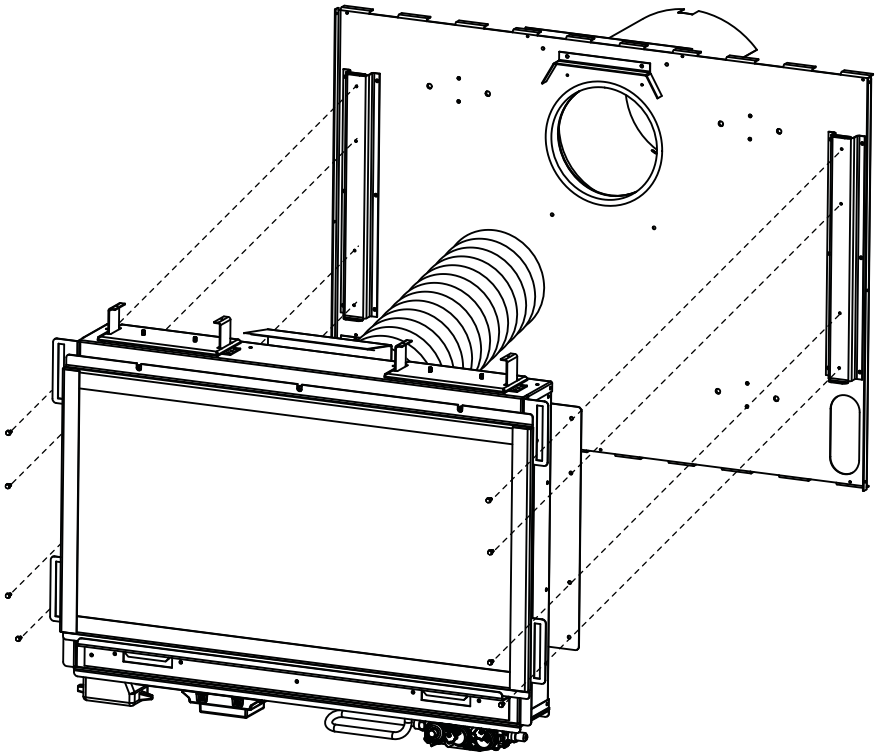

4.6 GAS INSTALLATION

⚠ WARNING
RISK OF FIRE, EXPLOSION OR ASPHYXIATION. ENSURE THERE ARE NO IGNITION SOURCES SUCH AS SPARKS OR OPEN FLAMES.
SUPPORT GAS CONTROL WHEN ATTACHING GAS SUPPLY PIPE TO PREVENT DAMAGING GAS LINE.
ALWAYS LIGHT THE PILOT WHETHER FOR THE FIRST TIME OR IF THE GAS SUPPLY HAS RUN OUT WITH THE GLASS DOOR OPENED OR REMOVED. PURGING OF THE GAS SUPPLY LINE SHOULD BE PERFORMED BY A QUALIFIED SERVICE TECHNICIAN. ASSURE THAT A CONTINUOUS GAS FLOW IS AT THE BURNER BEFORE CLOSING THE DOOR. ENSURE ADEQUATE VENTILATION. FOR GAS AND ELECTRICAL LOCATIONS, SEE “DIMENSION” SECTION.
ALL GAS CONNECTIONS MUST BE CONTAINED WITHIN THE APPLIANCE WHEN COMPLETE.
HIGH PRESSURE WILL DAMAGE VALVE. DISCONNECT GAS SUPPLY PIPING BEFORE TESTING GAS LINE AT TEST PRESSURES ABOVE 1/2 PSIG.
VALVE SETTINGS HAVE BEEN FACTORY SET, DO NOT CHANGE.

Installation and servicing to be done by a qualified installer.

A. Move the appliance into position and secure.

B. If equipped with a flex connector the appliance is designed to accept a 1/2” gas supply. Without the connector it is designed to accept a 3/8” gas supply. The appliance is equipped with a manual shut off valve to turn off the gas supply to the appliance.

C. Connect the gas supply in accordance to local codes. In the absence of local codes, install to the current CAN/CSA-B149.1 Installation Code in Canada or to the current National Fuel Gas Code, ANSI Z223.1 / NFPA 54 in the United States.

D. When flexing any gas line, support the gas valve so that the lines are not bent or kinked.

E. The gas line flex-connector should be installed to provide sufficient movement for shifting the burner assembly on it’s side to aid with servicing components.

F. Check for gas leaks by brushing on a soap and water solution. **Do not use open flame.**

30.1A

4.7 MOBILE HOME

This appliance is certified to be installed as an OEM (Original Equipment Manufacturer) installation in a manufactured home or mobile home and must be installed in accordance with the manufacturer’s instructions and the Manufactured Home Construction and Safety Standard, Title 24 CFR, Part 3280, or, when such a standard is not applicable, the Standard for Manufactured Home Installations, ANSI/NCSBCS A225.1 in the United States or the Mobile Home Standard, CAN/CSA Z240 MH Series, in Canada. This appliance is only for use with the type(s) of gas indicated on the rating plate. A conversion kit is supplied with the mobile home appliance.

This Mobile/Manufactured Home Listed appliance comes factory equipped with a means to secure the unit. For mobile home installations, the appliance must be fastened in place. It is recommended that the appliance be secured in all installations. Always turn off the pilot and the fuel supply at the source, prior to moving the mobile home. After moving the mobile home and prior to lighting the appliance, ensure that the media placed on the burner (ie. logs, glass etc.) is positioned correctly.

This appliance is certified to be installed in an aftermarket permanently located, manufactured (mobile) home, where not prohibited by local codes.
This appliance is only for use with the type of gas indicated on the rating plate. This appliance is not convertible for use with other gases, unless a certified kit is used.

Conversion Kits
This appliance is field convertible between Natural Gas (NG) and Propane (LP).
To convert from one gas to another consult your Authorized dealer/distributor.

29.3A

4.8 MINIMUM CLEARANCE TO COMBUSTIBLES

The front trims for the WHD31 are different sizes. See “DIMENSIONS” section prior to mounting the appliance.

MINIMUM CLEARANCE TO COMBUSTIBLE CONSTRUCTION FROM APPLIANCE AND VENT SURFACES:

- 0” to wall mounting plate
- 1” to bottom and sides of vent pipe*
- 2” to top of vent pipe*

MINIMUM CLEARANCES TO COMBUSTIBLES (FROM THE APPLIANCE):

- 11” to top
- 7” to sides
- 13” to bottom
- 0” to rear

* A minimum of 1” all around the vent pipe on all vertical runs to combustibles is required.

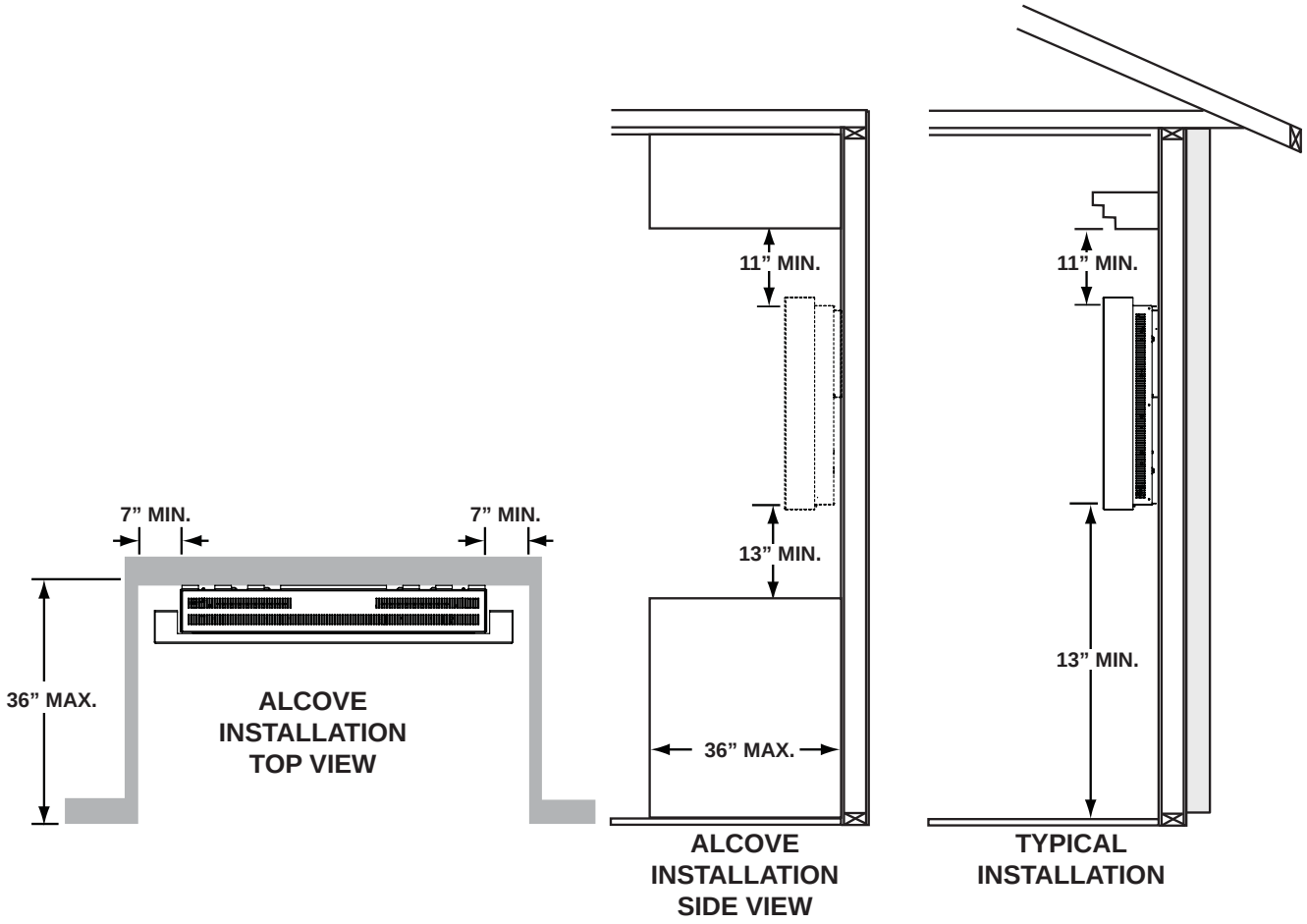

5.0 FINISHING

WARNING
RISK OF FIRE!
NEVER OBSTRUCT THE FRONT OPENING OF THE APPLIANCE.
DO NOT STRIKE, SLAM OR SCRATCH GLASS. DO NOT OPERATE APPLIANCE WITH GLASS REMOVED, CRACKED, BROKEN OR SCRATCHED.

72.4

5.1 HOUSING PANEL INSTALLATION

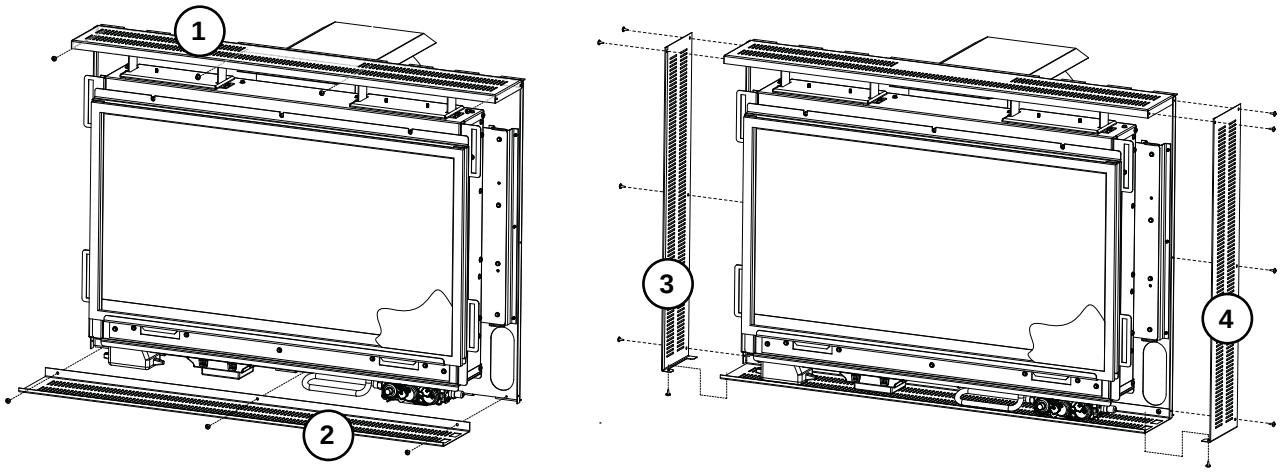

A. Secure the housing panels as illustrated using the 17 #8 X 3/8” screws supplied.

- 4 screws secure the top housing panel.
- 3 screws secure the bottom housing panel.
- 5 screws secure each of the side housing panels.

5.2 DOOR REMOVAL / INSTALLATION

⚠ WARNING

GLASS MAY BE HOT, DO NOT TOUCH GLASS UNTIL COOLED.

THE DOOR LATCHES ARE PART OF A SAFETY SYSTEM AND MUST BE PROPERLY ENGAGED. DO NOT OPERATE THE APPLIANCE WITH LATCHES DISENGAGED.

FACING AND/OR FINISHING MATERIALS MUST NOT INTERFERE WITH AIR FLOW THROUGH AIR OPENINGS, LOUVRES OPENINGS, OPERATION OF LOUVRES OR DOORS OR ACCESS FOR SERVICE. OBSERVE ALL CLEARANCES WHEN APPLYING COMBUSTIBLE MATERIALS.

BEFORE DOOR IS REMOVED TURN THE APPLIANCE OFF AND WAIT UNTIL APPLIANCE IS COOL TO THE TOUCH. DOORS ARE HEAVY AND FRAGILE SO HANDLE WITH CARE.

A. Remove the surround. (see “SURROUND INSTALLATION/REMOVAL” section.)

B. Remove the 3 screws that secure the door.

C. Lift the door up and off.

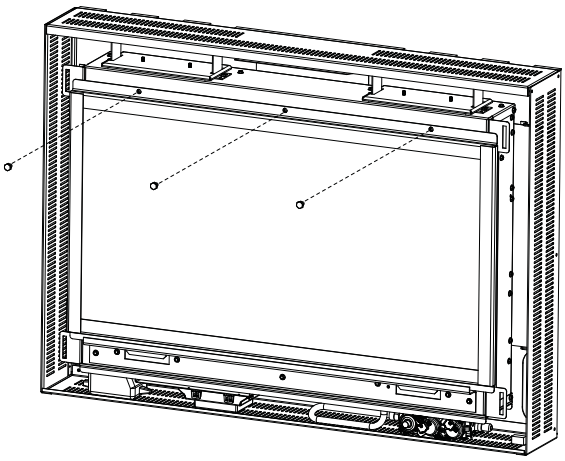

5.3 BRICK PANEL INSTALLATION

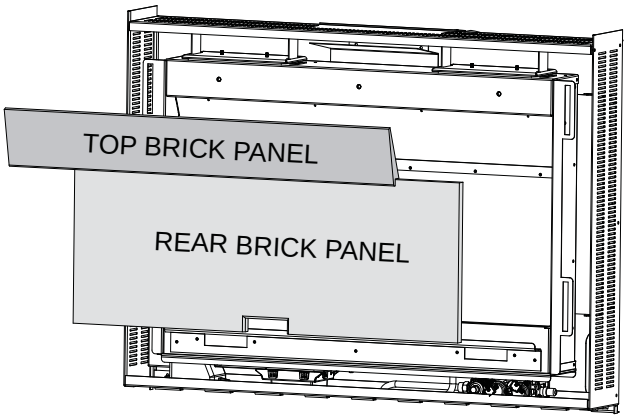

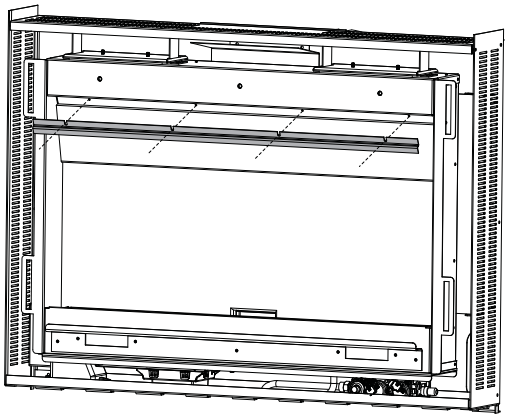

A. Carefully remove the 4 screws securing the brick retainer.

B. Uninstall the brick panels and remove the packaging.

C. Center the rear brick panel against the back of the firebox with the bottom edge resting on the back flange.

D. Place the top brick panel against the top of the rear brick panel. Align the holes in the brick retainer with the holes in the firebox and secure using the 4 screws provided.

5.4 GLASS MEDIA

⚠ WARNING

CLEAN THE GLASS MEDIA PRIOR TO INSTALLATION. BEFORE APPLYING THE CLEANED GLASS, ENSURE THAT IT IS DRY.

DO NOT CHANGE OR SUBSTITUTE THE GLASS MEDIA MATERIAL PROVIDED WITH THIS APPLIANCE. IF REPLACING, USE ONLY THE REPLACEMENT GLASS MEDIA AVAILABLE FROM YOUR AUTHORIZED DEALER / DISTRIBUTOR.

GLASS MEDIA OVER THE BURNER MUST NOT BE MORE THAN ONE LAYER HIGH. MORE THAN ONE LAYER OVER THE BURNER WILL CAUSE FLAME LIFTING AND SOOTING PROBLEMS.

Evenly spread the glass media onto the media tray, covering the burner tube and following the natural shape of the media tray.

In some installations, glass media over the burner tube may cause a “Puffing” sound. If this sound is excessive, simply push the media away from the burner ports.

NOTE: The distribution of glass media over the burner tube will influence the flame height. When the flames impinge on the glass, the glass may discolour slightly and the edges may soften.

CLEANING GLASS MEDIA

Glass media may have a fine oil residue that needs to be cleaned prior to installation. Clean the glass with mild dish soap, drain, rinse thoroughly and dry before placing over the burner.

74.1A

5.5 SURROUND INSTALLATION / REMOVAL

A. Lift the surround and slide the hooks into the slots on the appliance, then let it slide down into position.

NOTE: When installing the surround ensure no wires are pinched or exposed.

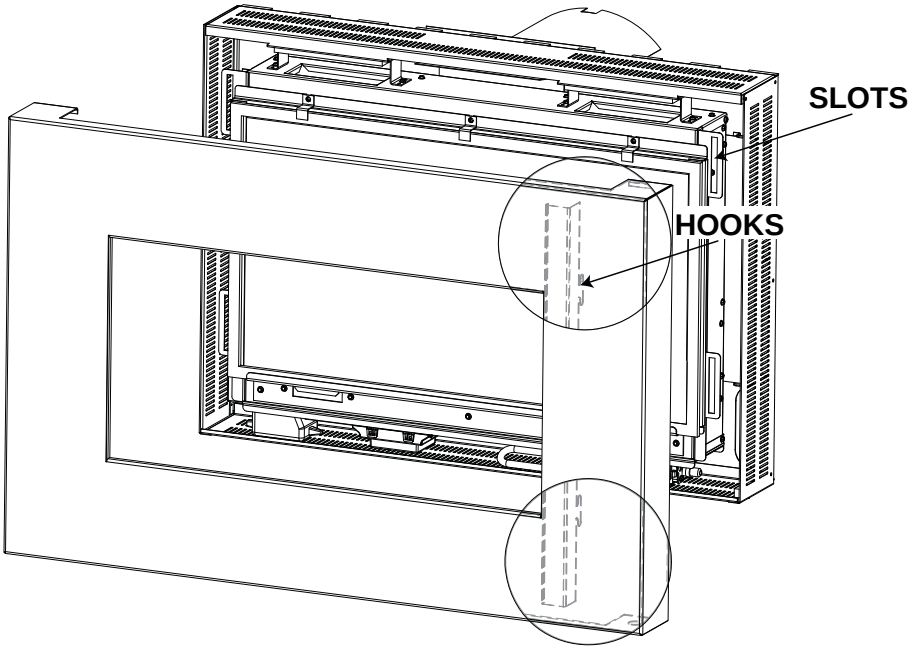

6.0 OPTIONAL INSTALLATION

6.1 SAFETY SCREEN INSTALLATION

A. Remove the 3 screws that secure the door.

B. Place the bottom of the safety screen into the door retainer. Pivot the top of the safety screen to the door frame and secure by using 3 screws to attach the safety screen and door retainer brackets.

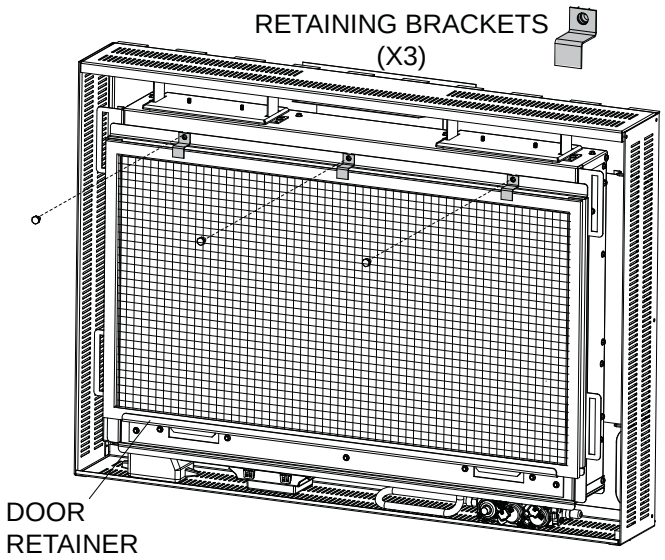

6.2 RECEIVER LOCATION/WIRING

A. Place the receiver against the bottom housing panel as close to the IPI control as possible. Secure using the velcro provided.

B. For wiring information see the section “WIRING DIAGRAM”.

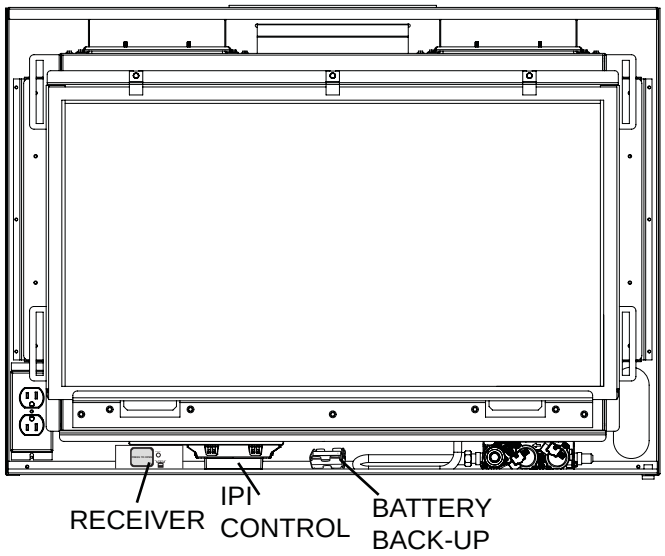

7.0 ELECTRICAL INFORMATION

7.1 HARD WIRING CONNECTION

It is necessary to hard wire this appliance.

Permanently framing the appliance with an enclosure, requires the appliance junction box to be hard wired. This appliance must be electrically connected and grounded in accordance with local codes. In the absence of local codes, use the current CSA C22.1 Canadian electrical code in Canada or the ANSI/NFPA 70-1996 National electrical code in the United States.

7.2 WIRING DIAGRAM

⚠ WARNING

DO NOT WIRE 110 VOLTS TO THE VALVE OR WALL SWITCH.

This appliance comes equipped with a battery back-up. If this backup is used install four AA batteries (not supplied) into the holder and connect to the wire harness. Place near the IPI board. Connect the battery holder to the wire harness before using the appliance. Place near the IPI board. (Batteries not included). If backup is used, it must be connected to the 6 volt battery pack supplied.

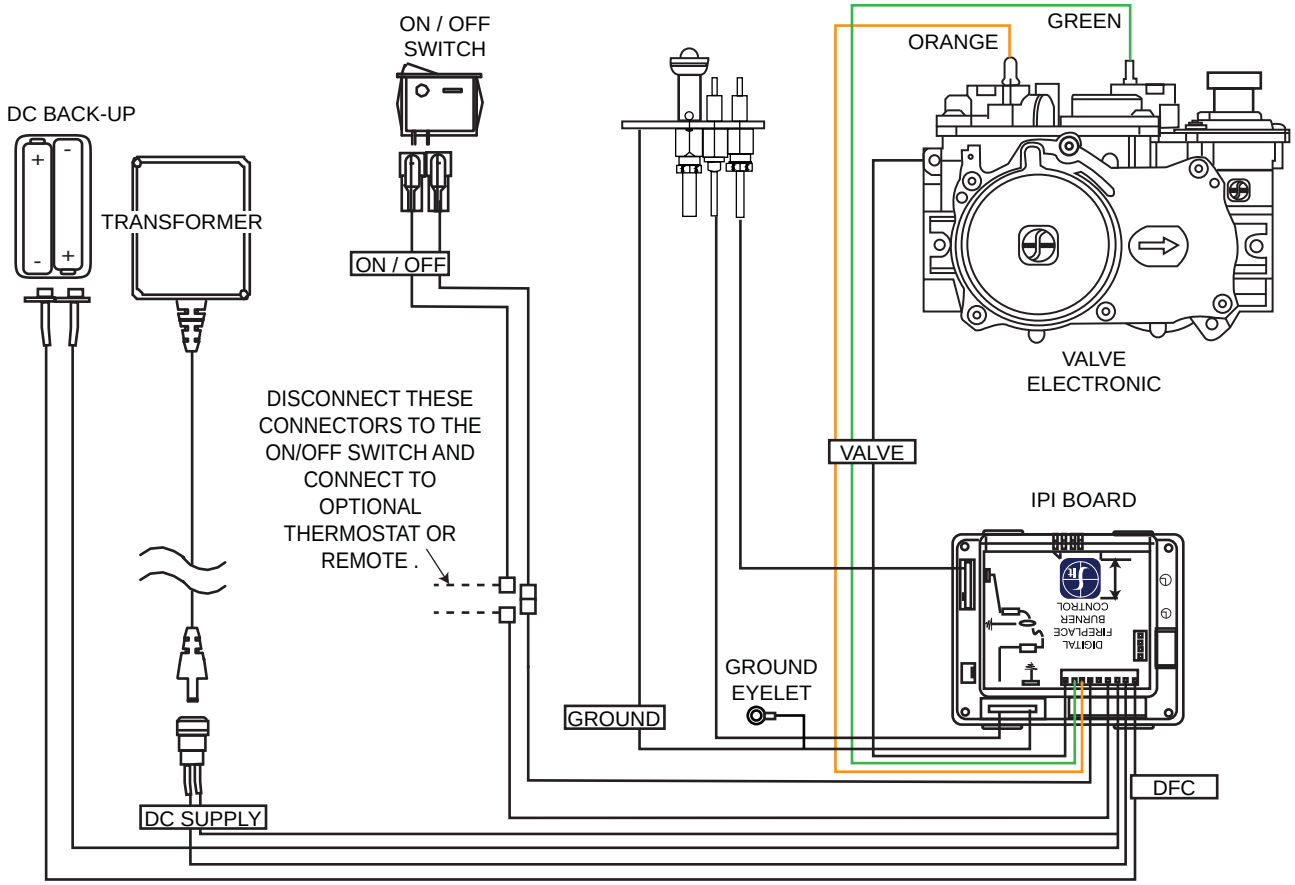

8.0 OPERATION

When lit for the first time, the appliance will emit a slight odour for a few hours. This is a normal temporary condition caused by the “burn-in” of internal paints and lubricants used in the manufacturing process and will not occur again. Simply open a window to sufficiently ventilate the room. After extended periods of non-operation such as following a vacation or a warm weather season, the appliance may emit a slight odour for a few hours. This is caused by dust particles in the heat exchanger burning off. Open a window to sufficiently ventilate the room.

8.1 OPERATING INSTRUCTIONS

OPERATING INSTRUCTIONS / INSTRUCTIONS D’OPERATION

FOR YOUR SAFETY READ BEFORE OPERATING / POUR VOTRE SÉCURITÉ LIRE AVANT DE FAIRE FONCTIONNER

WARNING: IF YOU DO NOT FOLLOW THESE INSTRUCTIONS EXACTLY, A FIRE OR EXPLOSION MAY RESULT CAUSING PROPERTY DAMAGE, PERSONAL INJURY OR LOSS OF LIFE.
INITIAL LIGHTING OF THE PILOT AND MAIN BURNERS MUST BE DONE WITH THE GLASS DOOR OFF.
DO NOT CONNECT VALVE OR WALL SWITCH TO ELECTRICITY. SEE INSTALLATION INSTRUCTIONS.

A. THIS FIREPLACE IS EQUIPPED WITH AN IGNITION DEVICE WHICH AUTOMATICALLY LIGHTS THE PILOT. DO NOT TRY TO LIGHT BY HAND.
B. BEFORE OPERATING SMELL ALL AROUND THE FIREPLACE AREA FOR GAS AND NEXT TO THE FLOOR BECAUSE SOME GAS IS HEAVIER THAN AIR AND WILL SETTLE ON THE FLOOR.
WHAT TO DO IF YOU SMELL GAS:
• TURN OFF ALL GAS TO THE FIREPLACE.
• OPEN WINDOWS.
• DO NOT TRY TO LIGHT ANY APPLIANCE.
• DO NOT TOUCH ANY ELECTRIC SWITCH; DO NOT USE ANY PHONE IN YOUR BUILDING.
• IMMEDIATELY CALL YOUR GAS SUPPLIER FROM A NEIGHBOUR’S PHONE. FOLLOW THE GAS SUPPLIER’S INSTRUCTIONS.
• IF YOU CANNOT REACH YOUR GAS SUPPLIER, CALL THE FIRE DEPARTMENT.
C. DO NOT TRY TO REPAIR ANY PART OF THIS ASSEMBLY. CALL A QUALIFIED SERVICE TECHNICIAN. FORCE OR ATTEMPTED REPAIR MAY RESULT IN A FIRE OR EXPLOSION.
D. DO NOT USE THIS FIREPLACE IF ANY PART HAS BEEN UNDER WATER. IMMEDIATELY CALL A QUALIFIED SERVICE TECHNICIAN TO INSPECT THE FIREPLACE AND REPLACE ANY PART OF THE CONTROL SYSTEM AND ANY GAS CONTROL WHICH HAS BEEN UNDER WATER.

ATTENTION: SI CES INSTRUCTIONS NE SONT PAS OBSERVÉES A LA LETTRE, UN FEU OU UNE EXPLOSION POURRAIT S’ENSUIVRE CAUSANT DES DOMMAGES A LA PROPRIETE, DES BLESSURES CORPORELLES OU PERTE DE VIE.
L’ ALLUMAGE INITIAL DE LA VEITLLEUSE ET DU BRULEUR PRINCIPAL DOIT SE FAIRE AVEC LA PORTE VITREE ENLEVEE.
NE RACCORDEZ PAS LA SOUPAPE OU L’INTERRUPTEUR MURALA L’ELECTRICITE.
CONSULTEZ LES INSTRUCTIONS D’INSTALLATION.

A. CET APPAREIL EST MUNI D’UN DISPOSITIF D’ALLUMAGE QUI ALLUME LA VEILLEUSE AUTOMATIQUEMENT.
N’ESSAYEZ PAS D’ALLUMER LA VEILLEUSE MANUELLEMENT.
B. AVANT D’ALLUMER SENTEZ L’AIR AUTOUR DE L’APPAREIL ET PRÈS DU PLANCHER (CERTAINS GAZ SONT PLUS LOURDS QUE L’AIR ET SE DÉPOSERONT AU NIVEAU DU PLANCHER) POUR DÉTECTER UNE FUITE POSSIBLE.
QUE FAIRE SI VOUS DÉTECTEZ UNE ODEUR DE GAZ:
• COUPEZ L’ALIMENTATION DE GAZ PRINCIPALE.
• OUVREZ LES FENETRES.
• N’ALLUMEZ AUCUN APPAREIL.
• NE TOUCHEZ PAS À AUCUN INTERRUPTEUR ÉLECTRIQUE; N’UTILISEZ AUCUN TÉLÉPHONE DANS VOTRE IMMEUBLE.
• APPELEZ IMMÉDIATEMENT VOTRE FOURNISSEUR DE GAZ D’UN TÉLÉPHONE VOISIN ET SUIVEZ SES INSTRUCTIONS.
• SI VOUS NE POUVEZ PAS REJOINDRE VOTRE FOURNISSEUR DE GAZ, APPELEZ LE SERVICE DES
INCENDIES.
C. N’ESSAYEZ PAS DE RÉPARER AUCUNE PIÈCE DE CET ASSEMBLAGE. APPELEZ UN TECHNICIEN QUALIFIÉ. FORCER OU TENTER DE RÉPARER L’ASSEMBLAGE POURRAIT CAUSER UN FEU OU UNE EXPLOSION.
D. N’UTILISEZ PAS CET APPAREIL SI UN DE SES COMPOSANTS À ÉTÉ SUBMERGÉ. CONTACTEZ IMMÉDIATEMENT UN TECHNICIEN DE SERVICE QUALIFIÉ POUR INSPECTER L’APPAREIL ET REMPLACER TOUT SYSTÈME DE CONTRÔLE DE GAZ TOUCHÉ PAR L’EAU.

W385-0460

8.2 LIGHTING INSTRUCTIONS

LIGHTING INSTRUCTIONS / INSTRUCTIONS D’ALLUMAGE

1. **STOP!** READ ALL INFORMATION OF OPERATING AND LIGHTING INSTRUCTIONS BEFORE PROCEEDING.
2. TURN OFF ELECTRIC POWER TO THE FIREPLACE.
3. THIS FIREPLACE IS EQUIPPED WITH AN IGNITION DEVICE WHICH AUTOMATICALLY LIGHTS THE PILOT. DO NOT TRY TO LIGHT THE PILOT BY HAND.
4. OPEN THE GLASS DOOR.
5. TURN MANUAL SHUTOFF VALVE CLOCKWISE ↷ TO OFF.
6. WAIT FIVE (5) MINUTES TO CLEAR OUT ANY GAS. IF YOU SMELL GAS INCLUDING NEAR THE FLOOR, **STOP!** FOLLOW “B” OF THE OPERATING INSTRUCTIONS. IF YOU DON’T SMELL GAS GO TO THE NEXT STEP.
7. TURN MANUAL SHUTOFF VALVE COUNTER-CLOCKWISE ↶ TO ON.
8. CLOSE THE GLASS DOOR.
9. TURN ON ALL ELECTRIC POWER TO THE FIREPLACE.
10. TURN ON MAIN BURNER.

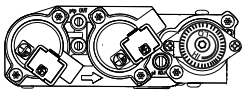

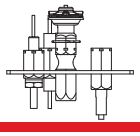

1. **ARRÊTEZ!** LISEZ TOUTES LES INSTRUCTIONS DE FONCTIONNEMENT ET D’ALLUMAGE AVANT DE CONTINUER.
2. COUPEZ L’ALIMENTATION ÉLECTRIQUE À L’APPAREIL.
3. CET APPAREIL EST MUNI D’UN DISPOSITIF D’ALLUMAGE QUI ALLUME LA VEILLEUSE AUTOMATIQUEMENT, N’ESSAYEZ PAS D’ALLUMER LA VEILLEUSE MANUELLEMENT.
4. OUVREZ LA PORTE VITRÉE.
5. TOURNEZ LA SOUPAPE DE SECTIONNEMENT MANUELLE VERS LA DROITE ↷ A “OFF”.
6. ATTENDEZ CINQ (5) MINUTES POUR QUE LE GAZ PUISSE S’ÉCHAPPER. SI VOUS DÉTECTEZ UNE ODEUR DE GAZ, **ARRÊTEZ!** SUIVEZ « B » DANS LES INSTRUCTIONS DE FONCTIONNEMENT. S’IL N’Y A PAS D’ODEUR DE GAZ, PASSEZ À L’ÉTAPE SUIVANTE.
7. TOURNEZ LA SOUPAPE DE SECTIONNEMENT MANUELLE VERS LA GAUCHE ↶ A “ON”.
8. FERMEZ LA PORTE VITRÉE.
9. RÉTABLISSEZ L’ALIMENTATION ÉLECTRIQUE AU FOYER.
10. ALLUMEZ LE BRÛLEUR PRINCIPAL.

TO TURN OFF GAS / INSTRUCTIONS POUR COUPER LE GAZ

1. TURN OFF ALL ELECTRICAL POWER TO THE FIREPLACE IF SERVICE IS TO BE PERFORMED.
2. TURN MANUAL SHUTOFF VALVE CLOCKWISE ↷ TO OFF. DO NOT FORCE.

1. COUPEZ L’ALIMENTATION ÉLECTRIQUE AU FOYER SI UN TRAVAIL D’ENTRETIEN DOIT SE FAIRE.
2. TOURNEZ LA SOUPAPE D’ARRÉT MANUELLE VERS LA DROITE ↷ À “OFF” NE FORCEZ PAS.

9.0 ADJUSTMENTS

9.1 PILOT BURNER ADJUSTMENT

Adjust the pilot screw to provide properly sized flame. Turn in a clockwise direction to reduce the gas flow.

Check Pressure Readings:
Inlet pressure can be checked by turning screw (A) counter-clockwise 2 or 3 turns and then placing pressure gauge tubing over the test point. Gauge should read 7” (minimum 4.5”) water column for natural gas or 13” (11” minimum) water column for propane. Check that main burner is operating on “HI”.

Outlet pressure can be checked the same as above using screw (B). Gauge should read 3.5” water column for natural gas or 10” water column for propane. Check that main burner is operating on “HI”.

AFTER TAKING PRESSURE READINGS, BE SURE TO TURN SCREWS CLOCKWISE FIRMLY TO RESEAL. DO NOT OVERTORQUE.

Leak test with a soap and water solution.

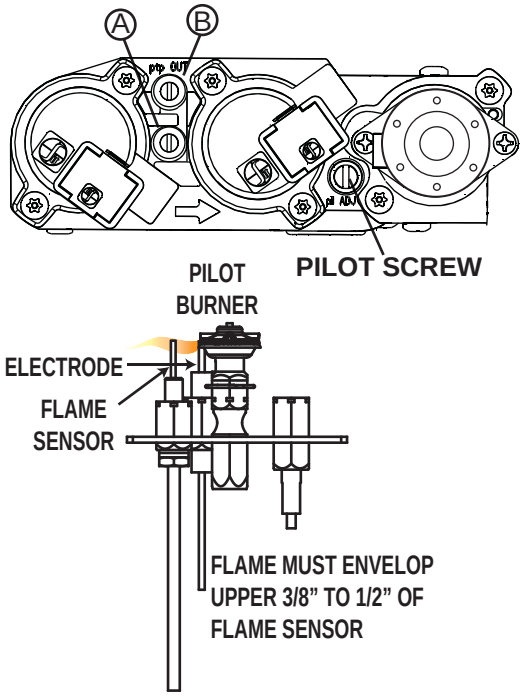

39.1A

9.2 VENTURI ADJUSTMENT

This appliance has an air shutter that has been factory set open according to the chart below:

Regardless of venturi orientation, closing the air shutter will cause a more yellow flame, but can lead to carboning. Opening the air shutter will cause a more blue flame, but can cause flame lifting from the burner ports. The flame may not appear yellow immediately; allow 15 to 30 minutes for the final flame colour to be established.

AIR SHUTTER ADJUSTMENT MUST ONLY BE DONE BY A QUALIFIED INSTALLER!

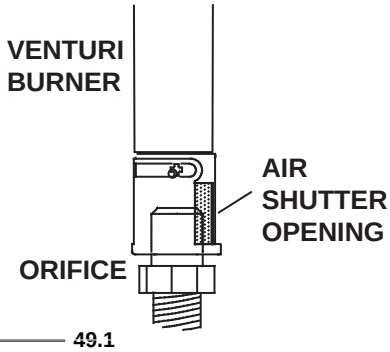

49.1

VENTURI ADJUSTMENT CHART	
FUEL	**WHD31**
NG	1/16”
LP	1/8”

9.3 FLAME CHARACTERISTICS

It's important to periodically perform a visual check of the pilot and burner flames. Compare them to the illustrations provided. If any flames appear abnormal call a service person.

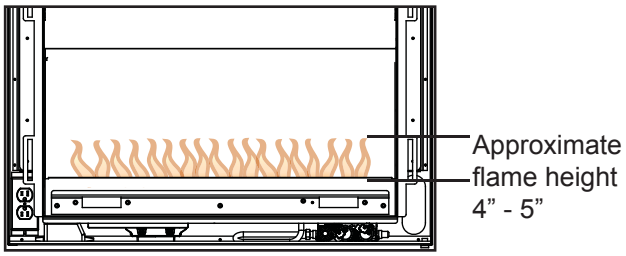

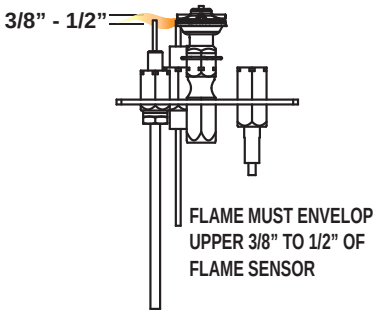

54.1A

10.0 MAINTENANCE

WARNING

TURN OFF THE GAS AND ELECTRICAL POWER BEFORE SERVICING THE APPLIANCE.

APPLIANCE MAY BE HOT, DO NOT SERVICE UNTIL APPLIANCE HAS COOLED.

DO NOT USE ABRASIVE CLEANERS.

CAUTION: Label all wires prior to disconnection when servicing controls. Wiring errors can cause improper and dangerous operation. Verify proper operation after servicing. This appliance and its venting system should be inspected before use and at least annually by a qualified service person. The appliance area must be kept clear and free of combustible materials, gasoline or other flammable vapors and liquids. The flow of combustion and ventilation air must not be obstructed.

1. In order to properly clean the burner and pilot assembly, remove the logs, rocks and/or glass to expose both assemblies.
2. Keep the control compartment, media, burner, air shutter opening and the area surrounding the logs clean by vacuuming or brushing, at least once a year.
3. Check to see that all burner ports are burning. Clean out any of the ports which may not be burning or are not burning properly.
4. Check to see that the pilot flame is large enough to engulf the flame sensor and/or thermocouple / thermopile as well as reaches the burner.
5. Replace the cleaned logs, rocks or glass. Failure to properly position the media may cause carboning which can be distributed in the surrounding living area.
6. Check to see that the main burner ignites completely on all openings when turned on. A 5 to 10 second total light-up period is satisfactory. If ignition takes longer, consult your local authorized dealer / distributor.
7. Check that the gasketing on the sides, top and bottom of the door is not broken or missing. Replace if necessary.
8. If for any reason the vent air intake system is disassembled, re-install and re-seal per the instructions provided for the initial installation.

40.1

10.1 CARE OF GLASS

DO NOT CLEAN GLASS WHEN HOT! DO NOT USE ABRASIVE CLEANERS TO CLEAN GLASS.

Buff lightly with a clean dry soft cloth. Clean both sides of the glass after the first 10 hours of operation with a recommended fireplace glass cleaner. Thereafter clean as required. If the glass is not kept clean permanent discoloration and / or blemishes may result.

WARNING

HOT GLASS WILL CAUSE BURNS.

DO NOT TOUCH GLASS UNTIL COOLED.

NEVER ALLOW CHILDREN TO TOUCH GLASS.

5.1

10.2 CARE OF PLATED PARTS

If the appliance is equipped with plated parts, you must clean fingerprints or other marks from the plated surfaces before operating the appliance for the first time. Use a glass cleaner or vinegar and towel to clean. If not cleaned properly before operating for the first time, the marks can cause permanent blemishes on the plating. After the plating is cured, the fingerprints and oils will not affect the finish and little maintenance is required, just wipe clean as needed. Prolonged high temperature burning with the door ajar may cause discolouration on plated parts.

NOTE: The protective wrap on plated parts is best removed when the assembly is at room temperature but this can be improved if the assembly is warmed, using a hair dryer or similar heat source.

6.1

10.3 DOOR GLASS REPLACEMENT

WARNING
DO NOT USE SUBSTITUTE MATERIALS.
GLASS MAY BE HOT, DO NOT TOUCH GLASS UNTIL COOLED.
CARE MUST BE TAKEN WHEN REMOVING AND DISPOSING OF ANY BROKEN DOOR GLASS OR DAMAGED COMPONENTS. BE SURE TO VACUUM UP ANY BROKEN GLASS FROM INSIDE THE APPLIANCE BEFORE OPERATION.
DO NOT STRIKE, SLAM OR SCRATCH GLASS. DO NOT OPERATE APPLIANCE WITH GLASS REMOVED, CRACKED, BROKEN OR SCRATCHED.

A. Place the door frame face down careful not to scratch the paint.

B. Center the gasketed glass inside the door frame with the thick side of the gasket facing up.

C. Bend the glass retainers located along the edge of the door frame over the gasket holding the glass in place. Careful not to break the glass.

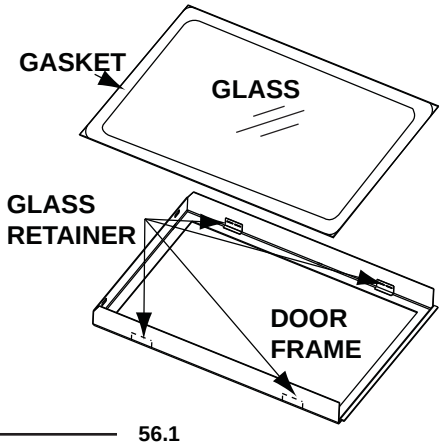

56.1

11.0 REPLACEMENTS

Contact your dealer or the factory for questions concerning prices and policies on replacement parts. Normally all parts can be ordered through your Authorized dealer / distributor.

FOR WARRANTY REPLACEMENT PARTS, A PHOTOCOPY OF THE ORIGINAL INVOICE WILL BE REQUIRED TO HONOUR THE CLAIM.

When ordering replacement parts always give the following information:

- Model & Serial Number of appliance
- Installation date of appliance
- Part number
- Description of part
- Finish

*** IDENTIFIES ITEMS WHICH ARE NOT ILLUSTRATED. FOR FURTHER INFORMATION, CONTACT YOUR AUTHORIZED DEALER.**

WARNING

FAILURE TO POSITION THE PARTS IN ACCORDANCE WITH THIS MANUAL OR FAILURE TO USE ONLY PARTS SPECIFICALLY APPROVED WITH THIS APPLIANCE MAY RESULT IN PROPERTY DAMAGE OR PERSONAL INJURY.

41.1

COMPONENTS		
REF NO.	**PART NO.**	**DESCRIPTION**
1	W010-2334	BLACK DOOR FRAME
2	W725-0065	NATURAL GAS VALVE
2	W725-0066	PROPANE GAS VALVE
3*	W385-0334	NAPOLEON® LOGO
4	W010-1865	PILOT ASSEMBLY NG
4	W010-1866	PILOT ASSEMBLY LP
5	W240-0011	ELECTRODE
6	W245-0025	SENSOR
7	W455-0069	PILOT INJECTOR - NATURAL GAS
7	W455-0068	PILOT INJECTOR - PROPANE
8	W456-0047	#47 NATURAL GAS ORIFICE
8	W456-0057	#57 PROPANE ORIFICE
9*	W300-0142	CRUSHED GLASS
10	W010-2440	REPLACEMENT GLASS C/W GASKET
11	W190-0029	CONTROL, IPI IGNITION BOARD
12	W290-0171	VALVE TRAIN GASKET
13	W100-0130	BURNER TUBE
14	W710-0035	TRAY, MEDIA
15	W660-0009	ON/OFF SWITCH
16	W615-0124	RIGID FIRESTOP
17	W585-0734	DEFLECTOR
18	W585-0735	SHIELD
19	W005-0017	RING ADAPTER
20	W475-0727	TOP FIBER PANEL
21	W475-0726	REAR FIBER PANEL
22*	W350-0517	BATTERY HOUSING

FLEXIBLE VENT KITS		
REF NO.	**PART NO.**	**DESCRIPTION**
GD220 (5 FT)		
23*	W010-0397	4" FLEXIBLE VENT PIPE - (5 FT) C/W SPACERS
24*	W410-0017	7" FLEXIBLE VENT PIPE - (5 FT)
GD330 (10 FT)		
25*	W410-0018	7" FLEXIBLE VENT PIPE -(10 FT)
26*	W010-0300	4" FLEXIBLE VENT PIPE -(10 FT) C/W SPACERS
27*	W010-0370	WALL SUPPORT ASSEMBLY

COMMON TERMINAL KITS		
REF NO.	**PART NO.**	**DESCRIPTION**
28	GD201	PERISCOPE
29	GD222	WALL TERMINAL KIT

ROOF TERMINAL KITS		
REF NO.	**PART NO.**	**DESCRIPTION**
GD110 - 1/12 TO 7/12 PITCH		
30	W670-0006	AIR TERMINAL
31	W490-0073	4/7 INNER/OUTER SLEEVE
32	W010-0567	ROOF SUPPORT
33	W263-0054	ROOF FLASHING
36	W170-0063	STORM COLLAR
GD111 - 8/12 TO 12/12 PITCH		
30	W670-0006	AIR TERMINAL
31	W490-0073	4/7 INNER/OUTER SLEEVE
32	W010-0567	ROOF SUPPORT
34	W263-0055	ROOF FLASHING
36	W170-0063	STORM COLLAR
GD112 - FLAT ROOF		
30	W670-0006	AIR TERMINAL
31	W490-0073	4/7 INNER/OUTER SLEEVE
32	W010-0567	ROOF SUPPORT
35	W263-0056	ROOF FLASHING
36	W170-0063	STORM COLLAR

ACCESSORIES		
REF NO.	**PART NO.**	**DESCRIPTION**
37*	W175-0001	4" COUPLER
38*	W175-0013	7" COUPLER
39*	W175-0327	CONVERSION KIT - NG TO LP
40	GD567	SAFETY SCREEN KIT
41	S31RK	RECTANGULAR SURROUND - BLACK
41	S31RN	RECTANGULAR SURROUND - BROWN
41	S31RP	RECTANGULAR SURROUND - PEWTER
42	S31CVK	CONVEX SURROUND - BLACK
42	S31CVSS	CONVEX SURROUND - STAINLESS STEEL
43*	LK31	LED LIGHT KIT
44*	W660-0081	THERMOSTAT, WALL MOUNT - DIGITAL
45*	F40	ON/OFF REMOTE
46*	F50	THERMOSTATIC REMOTE
47*	F50DR	THERMOSTATIC REMOTE - RED
47*	F50DY	THERMOSTATIC REMOTE - GREY
47*	F50DK	THERMOSTATIC REMOTE - BLACK
48*	W660-0026	PROGRAMMABLE TIMER, BATTERY OPERATED

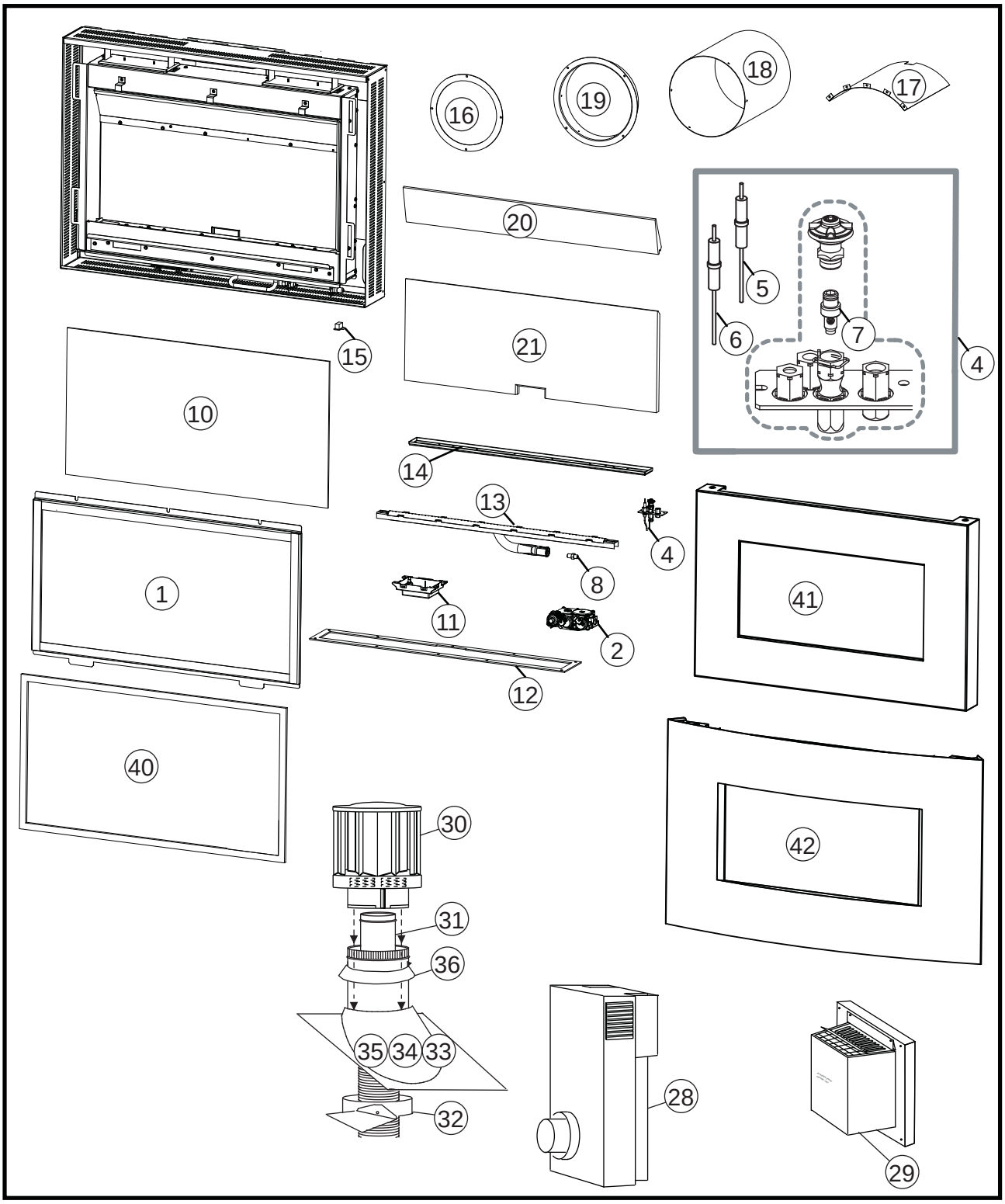
16
19
18
17
20
5
6
7
4
15
21
10
14
13
4
8
1
11
2
41
12
40
42
30
31
36
35
34
33
32
28
29

12.0 TROUBLESHOOTING

⚠ WARNING

ALWAYS LIGHT THE PILOT WHETHER FOR THE FIRST TIME OR IF THE GAS SUPPLY HAS RAN OUT, WITH THE GLASS DOOR OPEN OR REMOVED.

TURN OFF THE GAS AND ELECTRICAL POWER BEFORE SERVICING THE APPLIANCE.

APPLIANCE MAY BE HOT, DO NOT SERVICE UNTIL APPLIANCE HAS COOLED.

DO NOT USE ABRASIVE CLEANERS.

SYMPTOM	PROBLEM		TEST SOLUTION
Pilot will not light. Makes noise with no spark at pilot burner. 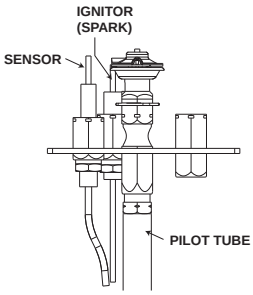 	Wiring.	-	Verify the wire for the sensor and the wire for the ignitor are connected to the correct terminals (not reversed) on the module. **NOTE:** Sensor has 3/16" connection and ignitor has 1/8" connection.
	Loose connection.	-	Verify no loose connections, electrical shorts in the wiring or ground out to any metal object.
	Module.	-	Turn the ON/OFF switch to the "OFF" position. Remove the igniter wire from the module. Place the ON/OFF switch to the "ON" position. Hold a grounded wire about 3/16" away from the ignitor (spark) terminal on the module. If no spark the ignitor terminal module must be replaced. If there is a spark the ignitor terminal is fine. Inspect pilot assembly for a shorted wire or cracked insulator around the electrode.
	Igniter Spark gap is incorrect.	-	Spark gap of the ignitor to the pilot should be 1/8".
	Transformer.	-	Verify the transformer is installed and plugged into the module. Check voltage of the transformer under load at the spade connections on the module with the ON/OFF switch in the "ON" position. Acceptable readings of a good transformer are between 6.2 and 7.0 volts A.C.
	Battery backup (if power is off)	-	Check batteries.
	A shorted or loose Connection.	-	Remove and reinstall the wiring harness that plugs into the module. Remove and verify continuity of each wire in wiring harness.
	Improper switch wiring.	-	Troubleshoot the system with the simplest ON/OFF switch.
	Module is not grounded.	-	Verify the valve and pilot assemblies are properly grounded to the metal chassis of the appliance or log set.
Pilot sparks but will not light.	Gas supply.	-	Verify that the incoming gas line ball valve is "Open". Verify that the inlet pressure reading is within acceptable limits, inlet pressures must not exceed 14" W.C.
	Out of propane gas.	-	Fill the tank.

42.7

SYMPTOM	PROBLEM	TEST SOLUTION
Carbon is being deposited on glass, logs, rocks, media or combustion chamber surfaces.	Air shutter has become blocked.	- Ensure air shutter opening is free of lint or other obstructions.
	Flame is impinging on the glass, logs, rocks, media or combustion chamber.	- Check that the glass, logs, rocks or media are correctly positioned. - Open air shutter to increase the primary air. - Check the input rate: check the manifold pressure and orifice size as specified by the rating plate values. - Check that the door gasketing is not broken or missing and that the seal is tight. - Check that both vent liners are free of holes and well sealed at all joints. - Check that minimum rise per foot has been adhered to for any horizontal venting.
Continues to spark and pilot lights, but main burner will not light.	Short or loose connection in sensor rod.	- Verify all connections. Verify the connections from the pilot assembly are tight; also verify these connections are not grounding out to any metal.
	Poor flame rectification or contaminated sensor rod.	- Verify the flame is engulfing the sensor rod. This will increase the flame rectification. Verify correct pilot orifice is installed and inlet gas specifications to manual. (Remember, the flame carries the rectification current, not the gas. If the flame lifts from pilot hood, the circuit is broken. A wrong orifice or too high of an inlet pressure can cause the pilot flame to lift.) The sensor rod may need cleaning.
	Poor grounding between pilot assembly and gas valve.	- Verify that the wire harness is firmly connected to module Verify that the ceramic insulator around the sensor rod is not cracked, damaged, or loose. Verify the connection from the sensor rod to the sensor wire.
	Damaged pilot or dirty sensor rod.	- Clean sensor rod with an emery cloth to remove any contamination that may have accumulated on the sensor rod. Verify continuity with multimeter with ohms set at the lowest range.
Pilot lights Stops sparking / pilot remains lit but burner will not turn on.	Wiring / Connection.	- Inspect all wires, ensure good tight connections. Verify that all wiring is installed exactly as specified.
	Wiring harness.	- Inspect the wiring harness, and verify the harness is tightly connected to the module. Verify that all wires are connected in the right order. See “WIRING DIAGRAM” section.
Exhaust fumes smelled in room, headaches.	Appliance is spilling.	- Check all seals. - Check if exhaust is re-entering through an open door or window.

42.7_2

SYMPTOM	PROBLEM	TEST SOLUTION
White / grey film forms.	Sulphur from fuel is being deposited on glass, logs or combustion chamber surfaces.	- Clean the glass, see “CARE OF GLASS” section - **DO NOT CLEAN GLASS WHEN HOT.** - If deposits are not cleaned off regularly, the glass may become permanently marked.
Flames are very aggressive.	Door is ajar.	- Tighten door clamps.
	Venting action is too great.	- Restrict vent exit with restrictor plate. See “RESTRICTING VENTS” section.
Main burner flame is a blue, lazy, transparent flame.	Blockage in vent.	- Remove blockage. In really cold conditions, ice buildup may occur on the terminal and should be removed. To minimize this from happening again, it is recommended that the vent lengths that pass through unheated spaces (attics, garages, crawl spaces) be wrapped with an insulated mylar sleeve. Prevent sleeve from sagging. Contact your local authorized dealer for more information.
	Compromised venting.	- Check venting system parameters (seal, length, rise, etc.).
	GLASS EMBERS ONLY: Too many glass embers.	- Re-distribute glass embers so that only a single layer is over top of the burner tube.
Main burner goes out: pilot goes out.	Vent recirculation.	- Check joint seals and installation.

42.7_3A

13.0 WARRANTY

NAPOLEON® products are manufactured under the strict Standard of the world recognized ISO 9001 : 2008 Quality Assurance Certificate.

NAPOLEON® products are designed with superior components and materials assembled by trained craftsmen who take great pride in their work. The burner and valve assembly are leak and test-fired at a quality test station. The complete appliance is again thoroughly inspected by a qualified technician before packaging to ensure that you, the customer, receives the quality product that you expect from NAPOLEON®.

NAPOLEON® GAS APPLIANCE PRESIDENT'S LIFETIME LIMITED WARRANTY

The following materials and workmanship in your new NAPOLEON® gas appliance are warranted against defects for as long as you own the appliance. This covers: combustion chamber, heat exchanger, stainless steel burner, phazer™ logs and embers, rocks, ceramic glass (thermal breakage only), gold plated parts against tarnishing, porcelainized enameled components and aluminum extrusion trims.*

Electrical (110V and millivolt) components and wearable parts such as blowers, gas valves, thermal switch, switches, wiring, remote controls, ignitor, gasketing, and pilot assembly are covered and NAPOLEON® will provide replacement parts free of charge during the first year of the limited warranty.*

Labour related to warranty repair is covered free of charge during the first year. Repair work, however, requires the prior approval of an authorized company official. Labour costs to the account of NAPOLEON® are based on a predetermined rate schedule and any repair work must be done through an authorized NAPOLEON® dealer.

* Construction of models vary. Warranty applies only to components included with your specific appliance.

CONDITIONS AND LIMITATIONS

NAPOLEON® warrants its products against manufacturing defects to the original purchaser only. Registering your warranty is not necessary. Simply provide your proof of purchase along with the model and serial number to make a warranty claim. NAPOLEON® reserves the right to have its representative inspect any product or part thereof prior to honouring any warranty claim. Provided that the purchase was made through an authorized NAPOLEON® dealer your appliance is subject to the following conditions and limitations:

Warranty coverage begins on the date of original installation.

This factory warranty is non-transferable and may not be extended whatsoever by any of our representatives.

The gas appliance must be installed by a licensed, authorized service technician or contractor. Installation must be done in accordance with the installation instructions included with the product and all local and national building and fire codes.

This limited warranty does not cover damages caused by misuse, lack of maintenance, accident, alterations, abuse or neglect and parts installed from other manufacturers will nullify this warranty.

This limited warranty further does not cover any scratches, dents, corrosion or discoloring caused by excessive heat, abrasive and chemical cleaners nor chipping on porcelain enamel parts, mechanical breakage of PHAZER™ logs and embers.

This warranty extends to the repair or replacement of warranted parts which are defective in material or workmanship provided that the product has been operated in accordance with the operation instructions and under normal conditions.

After the first year, with respect to this President's Lifetime Limited Warranty, NAPOLEON® may, at its discretion, fully discharge all obligations with respect to this warranty by refunding to the original warranted purchaser the wholesale price of any warranted but defective part(s).

NAPOLEON® will not be responsible for installation, labour or any other expenses related to the reinstallation of a warranted part and such expenses are not covered by this warranty.

Notwithstanding any provisions contained in the President's Lifetime Limited Warranty, NAPOLEON'S responsibility under this warranty is defined as above and it shall not in any event extend to any incidental, consequential or indirect damages.

This warranty defines the obligations and liability of NAPOLEON® with respect to the NAPOLEON® gas appliance and any other warranties expressed or implied with respect to this product, its components or accessories are excluded.

NAPOLEON® neither assumes, nor authorizes any third party to assume, on its behalf, any other liabilities with respect to the sale of this product.

NAPOLEON® will not be responsible for: over-firing, downdrafts, spillage caused by environmental conditions such as rooftops, buildings, nearby trees, hills, mountains, inadequate vents or ventilation, excessive venting configurations, insufficient makeup air, or negative air pressures which may or may not be caused by mechanical systems such as exhaust fans, furnaces, clothes dryers, etc.

Any damages to the appliance, combustion chamber, heat exchanger, plated trim or other components due to water, weather damage, long periods of dampness, condensation, damaging chemicals or cleaners will not be the responsibility of NAPOLEON®.

All parts replaced under the President's Limited Lifetime Warranty Policy are subject to a single claim.

During the first 10 years NAPOLEON® will replace or repair the defective parts covered by the lifetime warranty at our discretion free of charge. From 10 years to life, NAPOLEON® will provide replacement parts at 50% of the current retail price.

All parts replaced under the warranty will be covered for a period of 90 days from the date of their installation.

The manufacturer may require that defective parts or products be returned or that digital pictures be provided to support the claim. Returned products are to be shipped prepaid to the manufacturer for investigation. If a product is found to be defective, the manufacturer will repair or replace such defect.

Before shipping your appliance or defective components, your dealer must obtain an authorization number. Any merchandise shipped without authorization will be refused and returned to sender.

Shipping costs are not covered under this warranty.

Additional service fees may apply if you are seeking warranty service from a dealer.

Warranty labour allowance is only for the replacement of the warranted part. Travel, diagnostic tests, shipping and other related charges are not covered by this warranty.

ALL SPECIFICATIONS AND DESIGNS ARE SUBJECT TO CHANGE WITHOUT PRIOR NOTICE DUE TO ON-GOING PRODUCT IMPROVEMENTS. NAPOLEON® IS A REGISTERED TRADEMARK OF WOLF STEEL LTD.

Obadiah's · 406-300-1776

14.0 SERVICE HISTORY

Appliance Service History

This heater must be serviced annually depending on usage.

Date	Dealer Name	Service Technician Name	Service Performed	Special Concerns